TM 11-688

DEPARTMENT OF THE ARMY TECHNICAL MANUAL

DIRECTION FINDER SET AN/TRD-4A

DEPARTMENT OF THE ARMY • JUNE 1955

WARNING

DANGEROUS VOLTAGES EXIST IN THIS EQUIPMENT

Be careful when working on the plate and power supply circuits, or on the 115-volt ac line connections.

DON'T TAKE CHANCES!

EXTREMELY DANGEROUS VOLTAGES

EXIST IN THE FOLLOWING UNIT:

Azimuth Indicator IP–137/GRD —2,000-volt circuits

TECHNICAL MANUAL No. 11-688

DEPARTMENT OF THE ARMY
WASHINGTON 25, D. C., *24 June 1955*

DIRECTION FINDER SET AN/TRD-4A

			Paragraphs	Page
CHAPTER	1.	INTRODUCTION		
Section	I.	General	1, 2	3
	II.	Description and data	3-30	3
CHAPTER	2.	INSTALLATION		
Section	I.	Service upon receipt of Direction Finder Set AN/TRD-4A	31-43	36
	II.	Initial adjustment of equipment	44-51	52
CHAPTER	3.	OPERATION		
Section	I.	Controls and instruments	52-60	57
	II.	Operation under usual conditions	61-82	66
	III.	Operation under unusual conditions	83-86	80
CHAPTER	4.	ORGANIZATIONAL MAINTENANCE		
Section	I.	Organizational tools and equipment	87, 88	81
	II.	Preventive maintenance	89-92	81
	III.	Lubrication and weatherproofing	93-95	85
	IV.	Troubleshooting at organizational level	96-103	86
CHAPTER	5.	THEORY		
Section	I.	Fundamental principles	104-110	96
	II.	Block diagrams	111-114	100
	III.	Theory of antenna systems	115-124	106
	IV.	Theory of Goniometer Drive MX-1170/GRD	125-127	116
	V.	Theory of Electrical Goniometers GO-5/GRD and GO-6/GRD	128-132	117
	VI.	Theory of Radio Receiver R-390/URR	133, 134	120
	VII.	Theory of Azimuth Indicator IP-137/GRD	135-148	123
	VIII.	Theory of Radio Frequency Amplifier AM-496/TRD-4	149-156	143
	IX.	Theory of power and control circuits	157-162	147
	X.	Theory of Radio Transmitter T-279/UR	163-167	150
CHAPTER	6.	FIELD MAINTENANCE		
Section	I.	Troubleshooting at field maintenance level	168, 169	156
	II.	Troubleshooting in Goniometer Drive MX-1170/GRD and Electrical Goniometers GO-5/GRD and GO-6/GRD	170-176	157
	III.	Troubleshooting in Azimuth Indicator IP-137/GRD	177-182	159
	IV.	Troubleshooting in Radio Receiver R-390/URR	183, 184	168
Section	V.	Troubleshooting in Radio Frequency Amplifier AM-496/TRD-4	185-190	169
	VI.	Troubleshooting in Junction Box J-95B/CRD-2 and Switch Box SA-345/U	191-194	171
	VII.	Troubleshooting in Radio Transmitter T-279/UR	195-199	173
	VIII.	Repairs	200-213	176
	IX.	Alinement procedures	214-222	184
	X.	Final testing	223-232	191
CHAPTER	7.	SHIPMENT AND LIMITED STORAGE AND DEMOLITION TO PREVENT ENEMY USE		
Section	I.	Shipment and limited storage	233-236	197
	II.	Demolition of materiel to prevent enemy use	237, 238	198
INDEX				208

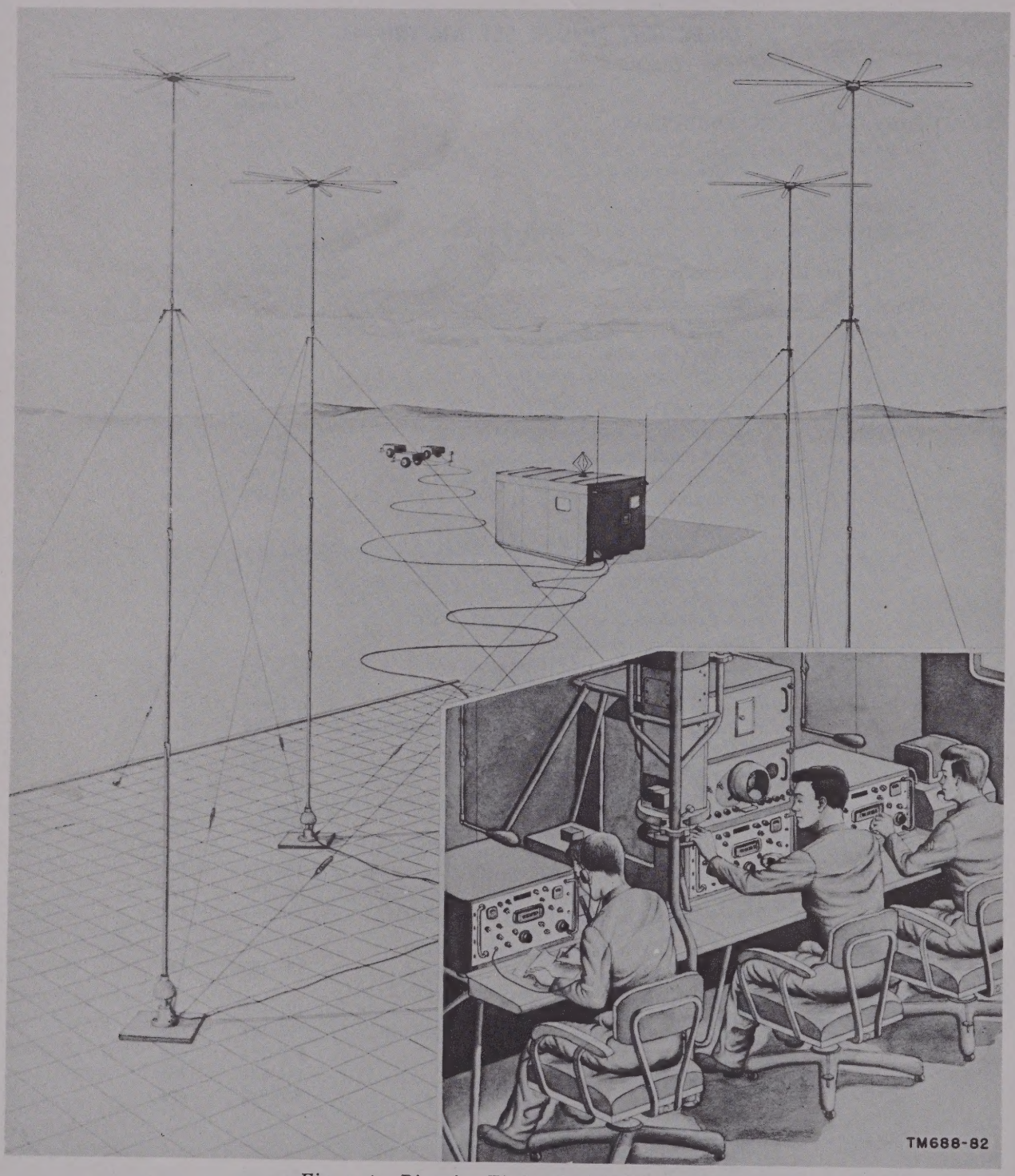

Figure 1. Direction Finder Set AN/TRD-4A.

CHAPTER 1

INTRODUCTION

Section I. GENERAL

1. Scope

a. This manual contains instructions for the installation, operation, maintenance, and repair of Direction Finder Set AN/TRD–4A. A typical installation using Direction Finder Set AN/TRD–4A is shown in figure 1.

b. Forward comments on this publication to Commanding Officer, The Signal Corps Publications Agency, Fort Monmouth, N. J., Attn: Standards Division.

2. Forms and Records

The following forms will be used for reporting unsatisfactory conditions of Army equipment and in performing preventive maintenance:

a. DD Form 6, Report of Damaged or Improper Shipment, will be filled out and forwarded as prescribed in SR 745–45–5 (Army); Navy Shipping Guide, Article 1850–4 (Navy); and AFR 71–4 (Air Force).

b. DA Form 468, Unsatisfactory Equipment Report, will be filled out and forwarded to the Office of the Chief Signal Officer, as prescribed in SR 700–45–5.

c. DD Form 535, Unsatisfactory Report, will be filled out and forwarded to Commanding General, Air Materiel Command, Wright-Patterson Air Force Base, Dayton, Ohio as prescribed in SR 700–45–5 and AF TO 00–35D–54.

d. DA Form 11–238, Operator First Echelon Maintenance Check List for Signal Corps Equipment (Radio Communication, Direction Finding, Carrier, Radar) will be prepared in accordance with instructions on the back of the form (fig. 51).

e. DA Form 11–239, Second and Third Echelon Maintenance Check List for Signal Corps Equipment (Radio Communication, Direction Finding, Carrier, Radar) will be prepared in accordance with instructions on the back of the form (fig. 52).

f. Use other forms and records as authorized.

Section II. DESCRIPTION AND DATA

3. Purpose and Use

a. Direction Finder Set AN/TRD–4A is a complete transportable radio direction finding station that covers the frequency range of .54 to 30 megacycles (mc), with separate facilities for direction finding, intercept reception, communication reception, field telephone communication, and frequency measurement. These facilities are housed in Shelter S–44A/G and are arranged around three individual operating positions, one each for a direction finder, intercept, and communication operator. Special tools, test instruments, and field spares are packed in bins and chests within the shelter. In addition, bins, brackets, straps, and racks are provided for transit stowing within the shelter of all components of Direction Finder Set AN/TRD–4A except the power units.

b. Flexibility to meet widely varying field conditions is provided by three direction finding antenna systems and two basic bearing indication methods.

c. The direction finding antenna systems are a fixed-position, four-element Adcock antenna

with a wire-mesh counterpoise, a fixed-position, crossed-loop antenna, and a manually rotatable single-loop antenna with a high-sensitivity preamplifier.

d. The Adcock antenna is intended for fixed station or semifixed station direction finding on either *ground waves or sky waves* from nearby or distant transmitters. Both of the loop antenna systems are usable for either mobile, fixed station, or semifixed station direction finding, but only on *ground waves* received from relatively nearby transmitters.

e. The rotatable single loop and preamplifier combination is intended for weak-signal *ground-wave* applications that require high receiving sensitivity.

f. The types of indication are automatic visual (using a cathode-ray tube (ert) indicator) and aural-null. The visual indicator is always used with a motor-driven goniometer. Either a manually operated goniometer or the rotatable single loop is used for aural-null indication.

g. Automatic visual indication has the general advantages of high-operating speed and convenience, accuracy on *swinging* bearings, positive sensing under all conditions and is, in addition, more suitable for use by unskilled operators.

h. Aural-null indication is provided primarily because of its advantages under conditions of noisy reception and cochannel interference from other stations and also for standby use if the visual indicator should breakdown. The *sharpest* receiver selectivity may be used with aural-null indication to minimize noise and interference. Separate and accurate bearings can be obtained on several interfering transmitters by using aural-null indication in combination with the receiver beat-frequency oscillator (bfo). The disadvantages of aural-null indication are less definite sensing, slowness and reading difficulty when bearings are *swinging*, and the requirement for greater operator skill.

i. Direction Finder Set AN/TRD–4A requires a single-phase 50 to 69 cycles per second (cps), alternating-current (ac) power source of 2,000-watt minimum capacity and a nominal voltage of either 115 or 230 volts. The power source must be well-regulated and its output must be free from transient fluctuations. Power supplied to the electronic components of Direction Finder Set AN/TRD–4A is passed through an autotransformer located in Junction Box J–95B/CRD–2. Provisions for metering line frequency and voltage and for adjusting the line voltage to the optimum operating level of 115 volts are contained in the junction box.

j. Two Gasoline Engine Generator Sets PU–236/G, which consist of a Power Unit PU–58/G in Trailer M–105, are supplied with each Direction Finder Set AN/TRD–4A. A power unit selector switch (in Switch Box SA–345/U) is supplied. This switch has three positions, two for the power units supplied with the set and one for a third power unit or an outside power line.

4. Systems application

a. One direction finder set can determine only the bearing of a distant transmitter. Two or more direction finder sets must be used to find the position or *fix* of a transmitter by triangulation (par. 6). Single direction finder sets are sometimes used for homing of aircraft, but are commonly, direction finder sets, such as Direction Finder Sets AN/TRD–4A, are operated in groups or nets, and bearings from the individual direction finder sets are plotted on maps to establish the *fix* of a transmitter. Direction finder nets usually use a minimum of three sets. Figure 2 illustrates the use of three direction finder sets to determine the *fix* area of one transmitter and for intercept monitoring of a second transmitter.

b. If direction finding could be accomplished without errors, a *fix* would always be a definite point. However, because of small and unavoidable bearing errors and fluctuations caused by instrumental and propagation factors, a practical *fix* almost always is an area within which the signal source (transmitter) exists. The two bearing lines drawn toward the source from each direction finder in figure 2 represent the range of possible error or uncertainty in individual bearings.

c. Figures 56, 57, and 58 are simplified functional block diagrams of Direction Finder Set AN/TRD–4A, which show the relationships of the various components to each other. Direction Finder Set AN/TRD–4A is an extremely versatile direction finding system and the components in this set may be interconnected in any of several different ways to produce optimum performance in all circumstances.

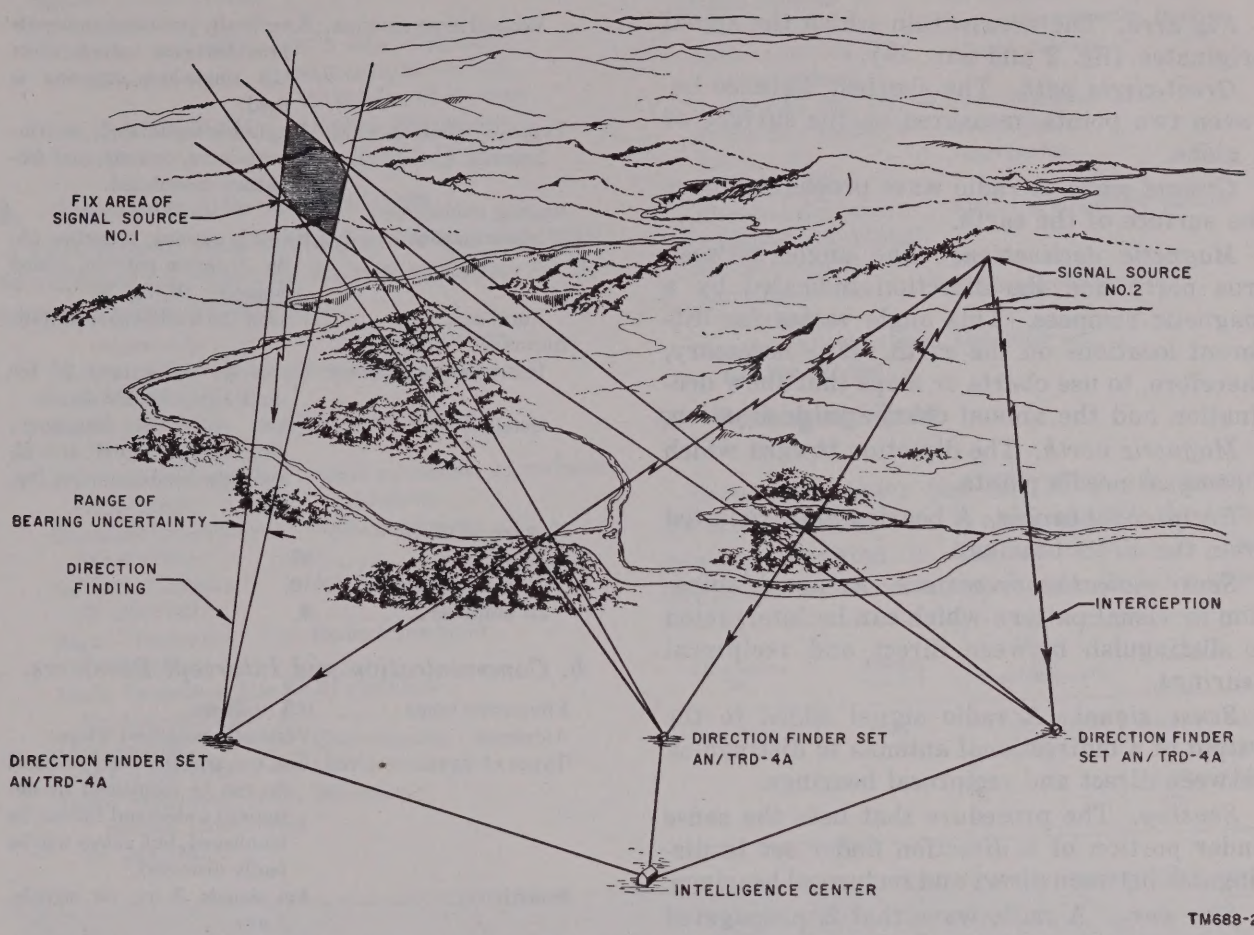

Figure 2. Tactical use of direction finder sets in a net for position finding and interception.

5. Basic Principles

A line perpendicular to an undistorted wave front always intersects the transmitter antenna. A direction finder set first locates a wave front. The direction of the transmitter is then assumed to be perpendicular to the wave front. For detailed information, refer to paragraphs 104 through 110.

6. Definitions

This paragraph contains an explanation of the technical terms used in this manual.

Ambiguity. Capable of being understood in either of two possible directions.

Azimuth. (See Bearing.)

Base line. A line passing through the positions of two direction finder sets.

Bearing. The direction to a distant transmitter measured clockwise from a reference direction such as true north or magnetic north.

Direction. The course on which radio waves are arriving from a transmitter.

Direct bearing. The bearing from the direction finder set to the transmitter.

Error, instrumental. Errors in the bearing, indicated by a direction finder set, which are caused by equipment inaccuracies.

Error, polarization. Errors in the bearing indicated by a direction finder set, introduced by horizontally polarized components of the electrical field under certain transmission conditions. Originally called night effects because errors are generally greatest at night.

Error, propagation. Errors that arise in propagation because the waves do not travel over a great-circle path.

Error, site. Errors caused by irregularities of, and obstacles or reflectors on, the terrain around a direction finder set.

Fix. The position of a distant transmitter. May be obtained by triangulation plotting of the bearings from two or more direction finder sets.

Fix area. The area within which the signal originates (fig. 2 and par. 4*b*).

Great-circle path. The shortest distance between two points, measured on the surface of a globe.

Ground wave A radio wave propagated over the surface of the earth.

Magnetic declination. The angle between true north and the direction indicated by a magnetic compass. This angle varies for different locations on the earth. It is necessary, therefore, to use charts or maps that show declination and the annual change in declination.

Magnetic north. The direction toward which a compass needle points.

Reciprocal bearing. A bearing 180° removed from the direct bearing.

Sense indication or pattern. An aural indication or visual pattern which can be interpreted to distinguish between direct and reciprocal bearings.

Sense signal. A radio signal added to the output of a bidirectional antenna to distinguish between direct and reciprocal bearings.

Sensing. The procedure that uses the sense finder portion of a direction finder set to distinguish between direct and reciprocal bearings.

Sky wave. A radio wave that is propagated by reflection from the ionosphere. Sometimes called an ionospheric wave.

Triangulation. Determination of the position or *fix* of a distant transmitter by plotting bearings from two or more direction finder sets a known distance apart.

True north. The direction to the geographic north pole.

7. Technical Characteristics

a. Direction Finding Components.

Frequency range	0.54 to 30 mc.
Antenna systems:	
Fixed Adcock antenna	Four vertically polarized monopoles.
Fixed crossed-loop antenna.	Two diamond-shaped loops.
Rotatable single-loop antenna.	Part of crossed-loop (One diamond-shaped loop).
Phantom sense antenna.	A portion of the voltage from each monopole in the Adcock or from each leg in the crossed-loop provides sense voltage when using either the Adcock or crossed-loop antenna.
Vertical sense antenna	A vertically polarized monopole provides sense voltage when the single-loop antenna is used.
Types of signals on which bearings are obtained.	Amplitude-modulated, continuous-wave, or code, and frequency-modulated.
Bearing indications:	
Instantaneous visual	Bearing pattern, propeller (A, fig. 3); sense pattern, folded propeller (B, fig. 3).
Aural-null	Null in the loudspeaker output.
Accuracy:	
Instrumental accuracy	Errors do not exceed 2° for vertically polarized waves.
Octantal error	Varies with the frequency, direction of signal arrival, and antenna installation (fig. 50).
Number of tubes:	
Df receiver	33.
Azimuth indicator	10.
Rf amplifier	3.

b. Communication and Intercept Receivers.

Frequency range	0.5 to 32 mc.
Antennas	Vertically polarized whips.
Types of signals received	Am, cw, and fm. Narrow-band fm can be monitored by detuning; wide-band fm can be monitored, but voices will be badly distorted.
Sensitivity	Am signals, 3 uv; cw signals, 1 uv.
Number of tubes	33 in each receiver.

c. Radio Transmitter.

Frequency range	0.50 to 30 mc.
Antenna	Telescopic, vertically polarized whip.
Transmitter type	Master oscillator power amplifier (mopa).
Types of signals	Cw and am (mcw).
Effective range	Less than 1 mile.
Modulation circuit	Negative resistance oscillator.
Weight	19 lb. (with batteries), 8 lb. (without batteries).

d. Power Input Requirements.

115/230 volts, 50 to 60 cps:	
Three radio receivers (170 watts each with the oven heaters off).	510 watts.
Rf amplifier	18 watts.
Azimuth indicator	100 watts.
Goniometer drive	125 watts.
Heater	550 watts.
Ventilation blower motor.	300 watts.
Lighting (four 60-watt lamps).	240 watts.
Total	1,843 watts.

Battery power for radio transmitter:	
Battery BA–424/U, 135-volt.	67.5 volts, 4 ma max. 90.0 volts, 20 ma max. 135.0 volts, 20 ma max.
Battery BA–404/U, 1.5-volt.	1.5 volts, 350 ma max.

8. Nomenclature Assignments

Throughout this manual a component may be referred to either by its nomenclature or its common name as follows:

Nomenclature	*Common name*
Direction Finder Set AN/TRD–4A.	Direction finder set.
Goniometer Drive MX–1170/GRD.	Goniometer drive.
Electrical Goniometer GO–5/GRD.	Signal goniometer or indicator goniometer.
Electrical Goniometer GO–6/GRD.	Signal goniometer.
Azimuth Indicator IP–137/GRD.	Azimuth indicator.
Radio Transmitter T–279/UR.	Radio transmitter.
Radio Frequency Amplifier AM–496/TRD–4.	Rf amplifier.
Counterpoise MX–1169/GRD.	Counterpoise.
Radio Frequency Transmission Line Switch SA–346/GRD.	Rf switch.
Radio Receiver R–390/URR.	Df receiver, intercept receiver, or communication receiver.
Antenna AS–533/GR (group of four).	Adcock antenna.
Antenna AT–297/TRD–4	Crossed-loop antenna.
Switch Box SA–345/U	Switch box.
Junction Box J–95B/CRD–2.	Junction box.
Electrical Equipment Cabinet CY–1426/U.	Electrical equipment cabinet.
Shelter S–44A/G	Shelter.
Cable Payout Reel RL–174/G.	Cable payout reel.
Gasoline Engine Generator Set PU–236/G.	Generator set.

9. Packaging Data (fig. 4)

Direction Finder Set AN/TRD–4A, except for the generator sets, is shipped with the components mounted in Shelter S–44A/G. The entire shelter is contained in one packing case.

Dimensions (in.)	Volume (cu. ft.)	Weight (lb) (including crate)	Contents
147 x 84 x 87	622	7,000 (3,200 crate).	Refer to table of components (par. 10).

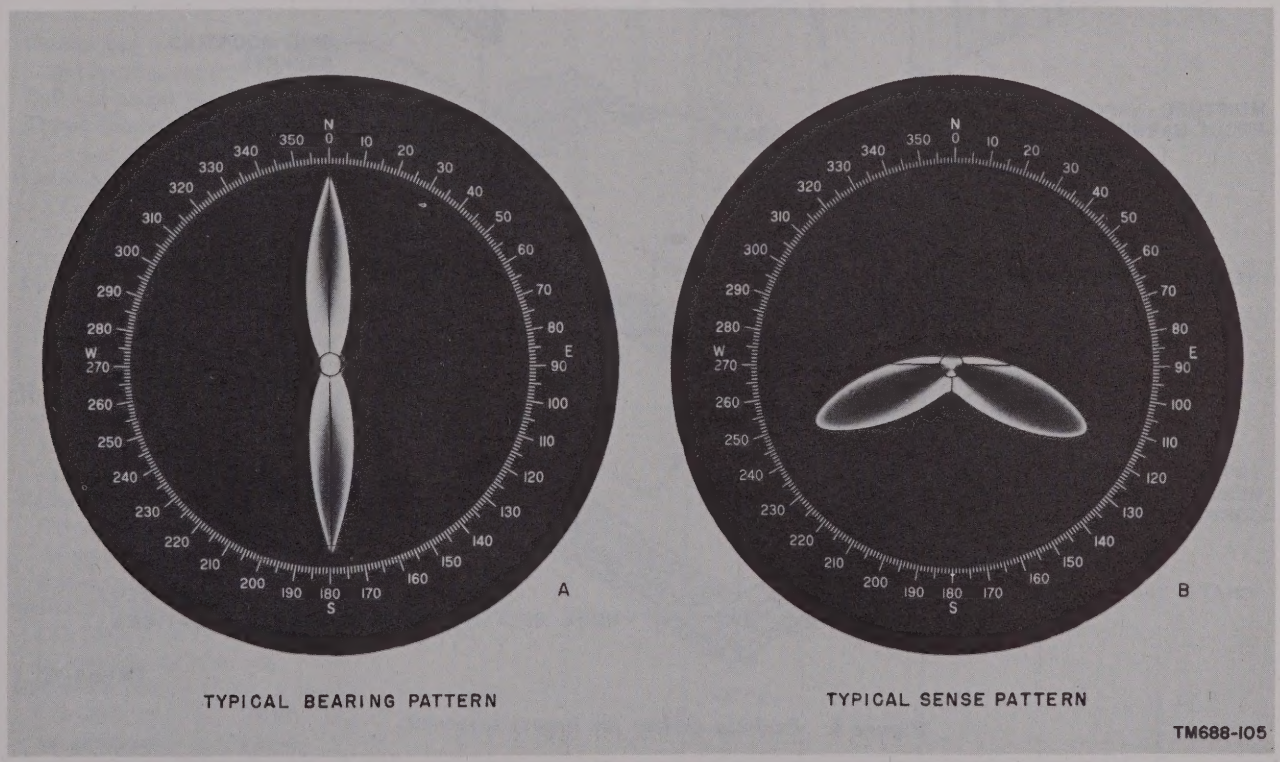

Figure 3. Typical bearing and sense patterns.

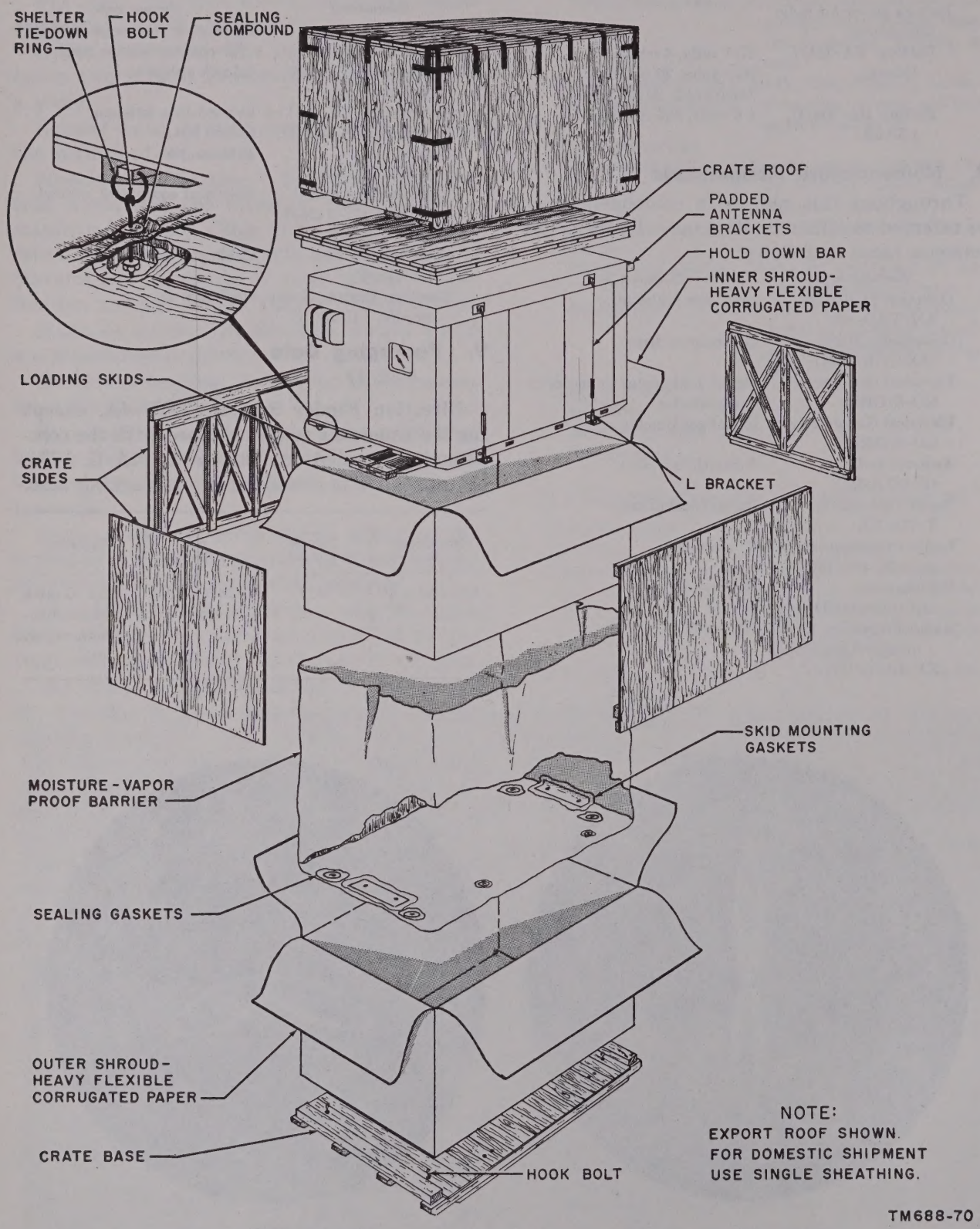

Figure 4. Packing shelter for export shipment.

10. Table of Components

Component	Reqd No. per unit	Height (in.)	Width (in.)	Depth (in.)	Length	Volume (cu. ft.)	Weight (lb.) ea.
Tripod head adapter	1	1½	4½ dia.				1¼
Tube socket adapter	3	1¼	1 dia.				½ oz.
Antenna AT–297/TRD–4 (crossed loop).	1	54½	54½		54½ in.		10½
Antenna Assembly AS–533/GR (Adcock) contains:	4 & 1 spare		2 dia.		375 in.		
Antenna Sections:							
AT–442/GR	4 & 1 spare		1¼ dia.		100 in.		17
AT–443/GR	4 & 1 spare		1 1/16 dia.		100 in.		7
AT–444/GR	4 & 1 spare		⅞ dia.		100 in.		6
AT–445/GR	4 & 1 spare		¾ dia.		75 in.		4
Antenna Base MT–865/GR	4 & 1 spare	7¼	24	24			21¼
Antenna coupler	4 & 1 spare	7¼	1⅝ dia.				½
Ground strap	4 & 6 spares		11/16		27 in.		½
Antenna Loading:							
Disk MX–1168/GR	4 & 1 spare	1⅞	1⅝		66 in.		2½
Antenna mast container	4 & 1 spare		30		120 in.		9
Guy adapter	4 & 6 spares	¾			2¾ in.		¼
Guy Stake GP–2	20 & 5 spares		1¼ dia.		16 in.		2
Nylon guy	12 & 3 spares		3/16 dia.		36 ft.		2½
Locating pins	5 & 10 spares		⅜ dia.		10 in.		¼
Whip antenna contains:	2						
Mast Base AB–15/GR	2				16½ in.		2½
Mast Base Bracket MP–50	2						4⅛
Mast Sections:							
MS–116–A	2 & 1 spare		⅜ dia.		39½ in.		⅜
MS–117–A	2 & 1 spare		11/32 to ¼ dia.		38¾ in.		⅜
MS–118–A	2 & 1 spare		7/32 to ⅛ dia.		39¾ in.		⅛
Canvas bag (contains guy assembly and locating pin).	2		10 dia.		15 in.		¾
Ball and socket joint	1		9/16 dia.		3½ in.		⅜
Tripod (for compass)	1		5 dia.		58 in. (max.)		14½
Cable Assembly Set CG–1097/TRD–4 (170 ft.) (W101 through W104). Adcock antenna to signal goniometer.[a]	2 & 2 spares		.420 dia.		170 ft.		68
Cable Assembly Set CG–1098/TRD–4 (9 ft.) (W201 through W204). Rf amplifier to signal goniometer.[a]	2 & 1 spare		.420 dia.		9 ft.		4
Radio Frequency Cable Assembly CG–1078/U (2½ ft.) (W401 through W404). Indicator goniometer to azimuth indicator.	4		.420 dia.		2½ ft.		½
Radio Frequency Cable Assembly CG–1079/U (2 ft. 10 in.) (W405). Azimuth indicator to indicator goniometer.	1		.405 dia.		34 in.		⅝
Radio Frequency Cable Assembly CG–1079/U (8 ft. 6 in.) (W205). Rf amplifier to rf switch.	1		.405 dia.		8½ ft.		3
Radio Frequency Cable Assembly CG–1079/U (2 ft.) (W501). Signal goniometer to rf switch.	1 & 1 spare		.405 dia.		2 ft.		½

Component	Reqd No. per unit	Height (in.)	Width (in.)	Depth (in.)	Length	Volume (cu. ft.)	Weight (bl.) ea.
Radio Frequency Cable Assembly CG–1079/U (3 ft. 5 in.) (W304A). Rf switch to df receiver.	1		.405 dia.		41 in.		1½
Cord CG–409E/U (2 ft. 3 in.) (W303A). Df receiver to azimuth indicator.	1		.420 dia.		27 in.		1/16
Electrical Power Cable Assembly CX–2377/U (2 ft. 3 in.) (W302). Df receiver to azimuth indicator speaker.	1		.310 dia.		27 in.		¼
Electrical Power Cable Assembly CX–2378/U (3 ft.) (W301). Azimuth indicator to signal goniometer.	1 & 1 spare		.310 dia.		3 ft.		⅝
Electrical Power Cable Assembly CX–2379/U (2 ft. 6 in.) (W701). Azimuth indicator to goniometer drive.	1		.340 dia.		30 in.		⅜
Electrical Power Cable Assembly CX–2380/U (20 ft.) (W801 through W803). Three power units to switch box.	3 & 1 spare		640 dia.		20 ft.		6
Electrical Power Cable Assembly CX–2380/U (125 ft.) (W804). Switch box to terminal box.	1		.640 dia.		125 ft.		30
Electrical Power Cable Assembly CX–2381/U (8 ft.) (W901). Junction box to azimuth indicator.	1		.540		8 ft.		1½
Electrical Power Cable Assembly CX–2381/U (10 ft.) (W902). Azimuth indicator to rf amplifier.	1		.540 dia.		10 ft.		1½
Electrical Power Cable Assembly CX–2382/U (10 ft.) (W903). Junction box to convenience outlet.	1		.540 dia.		10 ft.		1½
Electrical Power Cable Assembly CX–2383/U (16 ft.) (W1001). Terminal box to junction box.	1		.540 dia.		16 ft.		2
Electrical Power Cable Assembly CX–2383/U (3 ft. 4 in.) (W1002). Terminal box to circuit breaker.	1		.540 dia.		40 in.		¾
Electrical Power Cable Assembly CX–2384/U (9 ft.) (W1003). Communication receiver to loudspeaker.	1		.310 dia.		9 ft.		½
Radio Frequency Cable Assembly CG–1379/U (14 ft. 6 in. each) (W1007A and W1008A). Whip antennas to intercept and communication receivers.	2		.420 dia.		14½ ft.		3½
Electrical Equipment Cabinet CY–1426/U.	1	33¼	20	21¼		8½	55
Storage cabinet on shelter wall	1	32	12	30		6½	88
Operator chair	3	32	18	19½			00
Magnetic compass and case	1	4	4½	¾			1½
Container for guy stakes	2		29½		24 in.		¾
Container for locating pins	1		14½		15 in.		¾
Container for counterpoise	1		65		164 in.		10
Counterpoise MX–1169/GRD contains:	1	¼	75 ft.	75 ft.			268
Ground rod	5		½ dia.		72 in.		3

Component	Reqd No. per unit	Height (in.)	Width (in.)	Depth (in.)	Length	Volume (cu. ft.)	Weight (lb.) ea.
Counterpoise clamp (inverted J).	42		1⅜		10¾ in.		¼
Canvas bag (counterpoise clamps).	1		10		15 in.		¾
Goniometer Drive MX-1170/GRD.	1	10½	12¾	19		1.48	40
Electrical Goniometer GO-5/GRD.	2	5½	4½	8½		.12	4½
Electrical Goniometer GO-6/GRD.	1	5½	4½	8½		.12	4½
Whip antenna guy	2		3/16 dia.		120 in.		.1
Hand hammer	1				16 in.		3
Headset	3	3	6		7 in.		1
Headset cord	3				75 in.		½
Azimuth Indicator IP-137/GRD	1	10½	17	19		1.90	65
Junction Box J-95B/CRD-2	1	14½	15	14		1.76	64
Telegraph Key J-47	1	1¼	2½	5¼			½
Desk lamp	2	32	3½	5			2¼
Rod level	1	4	½	1			
Steel tape	1				620 in.		
Layout template chain (antenna)	1				16½ ft.		¾
Loudspeaker LS-166/U	1	4	2½	4			2
Cable Payout Reel RL-174/G	1	26	24	19		6.80	75
Plumb bob (for tripod)	1	1½	1½ dia.		3 in.		½
Radio Frequency Amplifier AM-496/TRD-4.	1	33½	6½	6½		.81	88
Radio Receiver R-390/URR, rack mounted.	1	10½	17¼	19		2	82½
Radio Receiver R-390/URR with Case CY-979/URR.	2	12¾	17⅛	21⅜		2.70	87½
Gasoline Engine Generator Set PU-236/G, contains:	2						
Power Unit PU-58/G	2	41	28¼	69¼		47	1,586
Trailer M-105	2	98	83	165½		777	2,300
Shelter S-44A/G:	1	74	84½	139		503	2,127
Blackout curtain	1	57	75				4
Blower assembly	1	13¼	12¼	15			37
Fire extinguisher	1	16	5¼ dia.				20
Fuel tank unit	1	15½	17	8½			15
Heater assembly	1	35½	64	29¾			193
Hold-down bars	4		1¼ dia.		63¾ in.		5½
Hold-down bar extensions	4		1¼ dia.		12 in.		2
Joining cover	1	22¾	249				6
Folding ladder	1	96	16⅞				11
Loading skids	2	10	10	2½	130 in.		127
Skid rope, 1¼-inch	1		1¼ dia.		100 ft.		
Technical manual	1						
Panel door key	4						
Screwdriver	1						
Wrench, ½ inch	2						
Antenna mast strap assembly	2		10 dia.		34 in.		¼
Counterpoise strap assembly	3				67 in.		½
Ladder strap and buckle assembly	2				32 in.		⅛
Lamp tie-down strap assembly	2				10 in.		1/16
Ground rod strap	2				12 in.		1/16
Power cable strap	2				30 in.		¼
Switch Box SA-345/U	1	7¼	10	8½		.34	7¼
Radio Frequency Transmission Line Switch SA-346/GRD.	1	3½	3½	2¼			1½
Instrument table	1	64¼	113½	41¼			275
Telephone EE-8-B	1	10	4		8 in.		10¼
Telephone bracket	1	8¼	4½		10¼		1¼
Radio Transmitter T-279/UR	1	16	7½		9½ in.		8

[a] A set consists of two cables matched electrically and tied in pairs.

Note.—This list is for general information only. See appropriate supply publications for information pertaining to requisition of spare parts. Additional parts are listed in paragraphs 28 and 88.

11. Description of Adcock Antenna
(figs. 5 and 6)

a. The Adcock antenna system consists of four vertical monopole antennas erected in a square array centered over a square wire-mesh counterpoise. The four monopole antennas correspond to the four cardinal compass points: north, east, south, and west.

b. To cover the frequency range of .54 to 10 mc, the Adcock antenna system is erected with a monopole height of 29 feet and a spacing of 33 feet between pairs (A, fig. 5). To cover the frequency range of 8 to 30 mc, a height of 22 feet 4 inches and a spacing of 18 feet 10 inches are used (B, fig. 5).

c. Four coaxial cables, one from each monopole, are individually routed to the center of the counterpoise. From the counterpoise center, the entire group of four cables is routed under and along a diagonal of the counterpoise and then to the shelter.

d. Each monopole antenna is a four-section mast, called Antenna AS–533/GR (fig. 6). Antenna AS–533/GR consists of the following:

(1) Antenna Section AT–445/GR (1, fig. 6) is a ¾-inch diameter, steel tube approximately 75 inches long. An internally threaded sleeve in the upper end is used to attach the antenna loading disk. A locking lever at the lower end is used to clamp it to the section below.

(2) Antenna Section AT–444/GR (2, fig. 6) is similar to Antenna Section AT–445/GR except that it is made of a ⅞-inch diameter tube approximately 100 inches long and has a guy plate fastened to the upper end. A locking lever at the lower end is used to clamp it to the section below.

(3) Antenna Section AT–443/GR (3, fig. 6) is similar to Antenna Section AT–444/GR except that it is made of 1⅛-inch diameter, steel tube approximately 100 inches long and has no guy plate. A locking lever at the lower end is used to clamp it to the section below.

(4) Antenna Section AT–442/GR (4, fig. 6) is a 1¼-inch diameter, steel tube approximately 100 inches long. The mast insulator is built into this mast section near the bottom. A ball at the lower end attaches the mast socket in the mast base. In the removable cylindrical antenna coupler (13, fig. 6), located on the side of the mast insulator above the ball, are two terminating resistors and an antenna cable connector. A rubber hood protects the cylindrical housing.

(5) Antenna Loading Disk MX–1168/GR (5, fig. 6) consists of four 5½-foot loops which are arranged symmetrically about a common axis. The loading disk is mounted to the top of Antenna Section AT–445/GR. The purpose of the loading disk is to improve sensitivity and to balance in the low-frequency range. The loading disk may be collapsed for shipment or storage purposes.

(6) The mast container (6, fig. 6) is provided to store the antenna sections. The nylon guys (7, fig. 6) are provided to guy the erected monopole. The guy adapter (8, fig. 6) is used to connect the nylon guy to the guy stake; one spare is provided. Four Guy Stakes GP–2 (9, fig. 6) are used to anchor the base to the ground, and another Guy Stake GP–2 is used to anchor a nylon guy to ground. The locating pins (10, fig. 6) are used to mark the location for erecting the monopole. The ground strap (11, fig. 6) is used to connect the lower end of the antenna coupler to the counterpoise.

(7) Antenna Base MT–865/GR (12, fig. 6) is a square wooden platform with a socket for the mast ball. A cutaway portion of the socket allows the mast to be lowered to a horizontal position. There are three leveling screws on the socket for adjusting the mast vertically. Two pins are provided, one is used to lock the ball in the socket and the other is used to keep the mast vertical. Four guy stakes are driven through the holes in the corner of the base to anchor the base to the ground. Two guy plates for attaching the guys are secured to the base.

A. LOW-FREQUENCY ANTENNA (.54-10 MC), 33 FT SPACING, FOUR SECTIONS AND LOADING DISK FOR EACH MONOPOLE.

B. HIGH-FREQUENCY ANTENNA (8-30 MC), 18 FT 10 IN. SPACING, THREE SECTIONS FOR EACH MONOPOLE.

TM688-56

Figure 5. Adcock antenna installations.

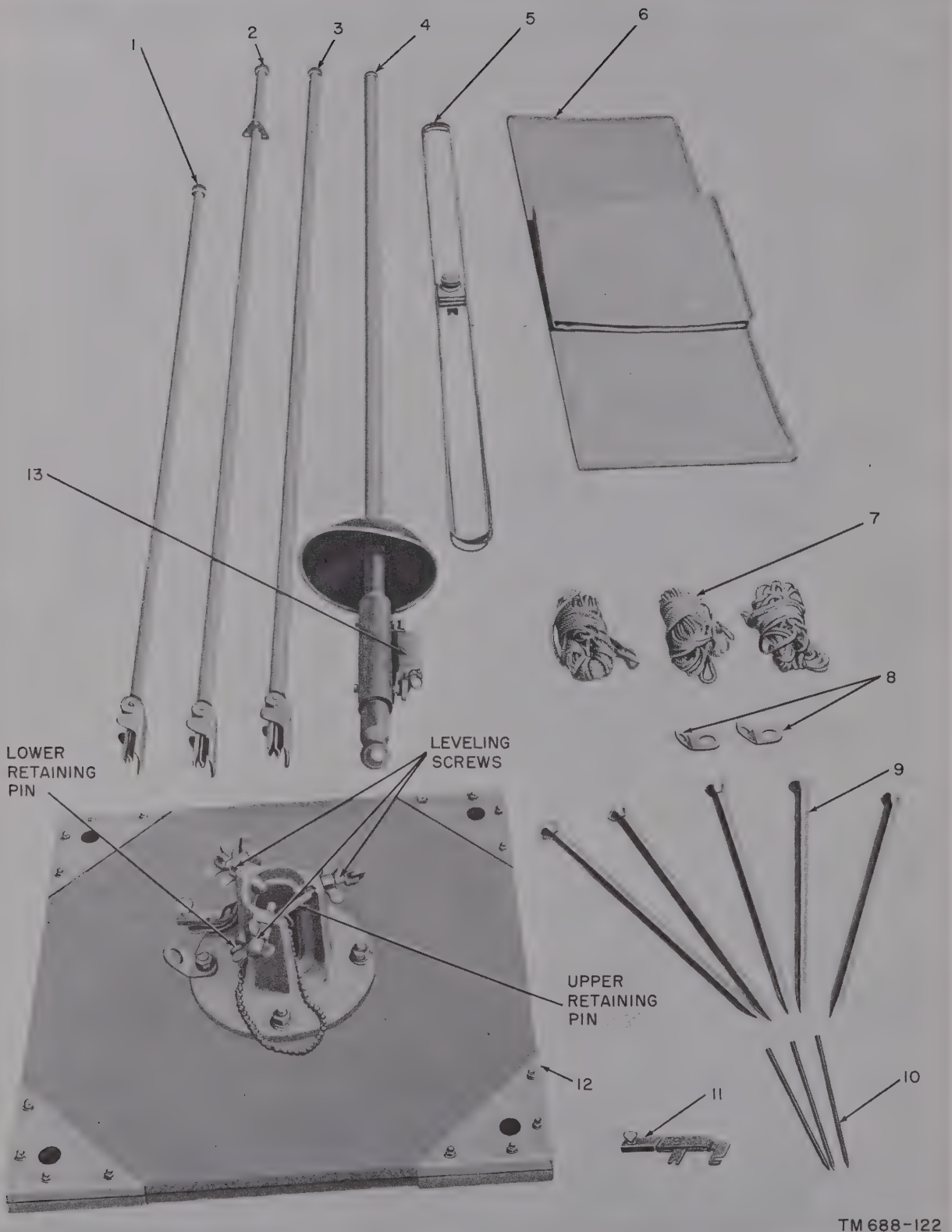

1 Antenna Section AT-445/GR
2 Antenna Section AT-444/GR
3 Antenna Section AT-443/GR.
4 Antenna Section AT-442/GR
5 Antenna Loading Disk MX-1168/GR
6 Mast Container
7 Nylon guys
8 Guy adapters
9 Guy Stakes GP-2
10 Locating pins
11 Ground strap
12 Antenna Base MT-865/GR
13 Antenna coupler

Figure 6. Antenna AS-533/GR (Adcock monopole).

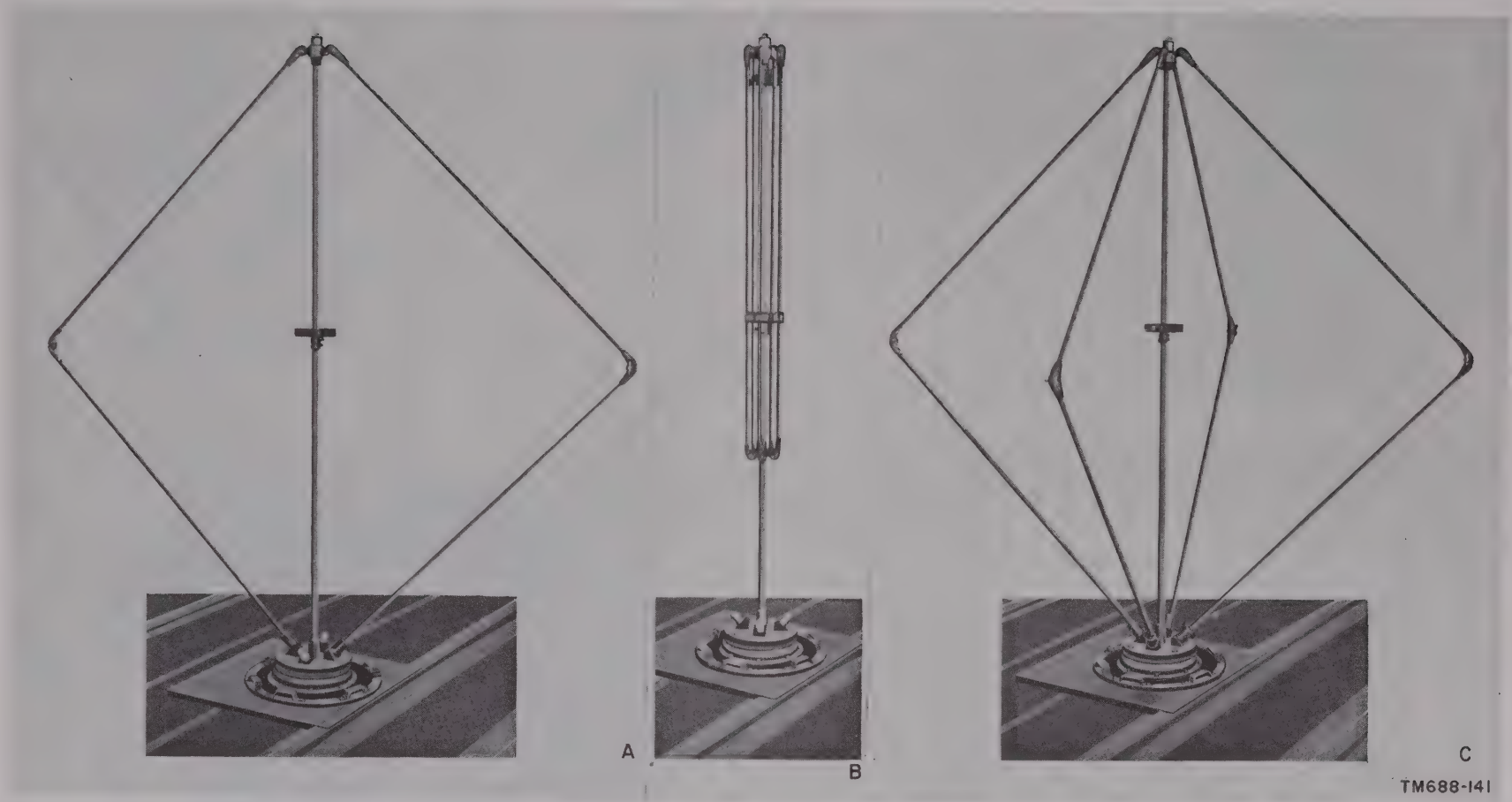

Figure 7. Antenna AT-297/TRD-4 (crossed-loop).

12. Description of Antenna AT–297/TRD–4 (Crossed-loop) (fig. 7)

The crossed-loop antenna consists of two identical diamond-shaped loop antennas mounted at a fixed angle of 90° with respect to each other when installed on the roof of the shelter (C, fig. 7). The loops, when installed, extend 4 feet 10 inches above the roof of the shelter. The loops have hinged joints at the outermost corners, permitting them to be folded when stowed (B, fig. 7). One loop can be removed and the other can be operated alone as a rotatable antenna (A, fig. 7). The vertical-insulated rod at the center of the crossed-loop antenna serves as a mechanical support when the fixed crossed-loop antenna is used and serves as a sense antenna when the rotatable single-loop antenna is used.

13. Description of Counterpoise MX–1169/GRD (fig. 8)

Counterpoise MX–1169/GRD assures uniform ground conductivity for all four monopoles of the Adcock antenna system. The counterpoise is a square approximately 75 feet on each side when unfolded. It consists of nine 75-foot by 8-foot sections of 18-inch mesh which is constructed of No. 12 gage stranded, tinned, copper wire. Each section has an 8-foot wooden piece at each end. The nine sections are joined to one another by strips of ¼-inch tinned, copper braid. The counterpoise is anchored to the ground by 42 metal clamps that fit over the wooden end pieces. Four ground stakes and one spare are provided for grounding the corners of the counterpoise. When folded, the counterpoise is protected by a canvas wrap-around container, secured by straps.

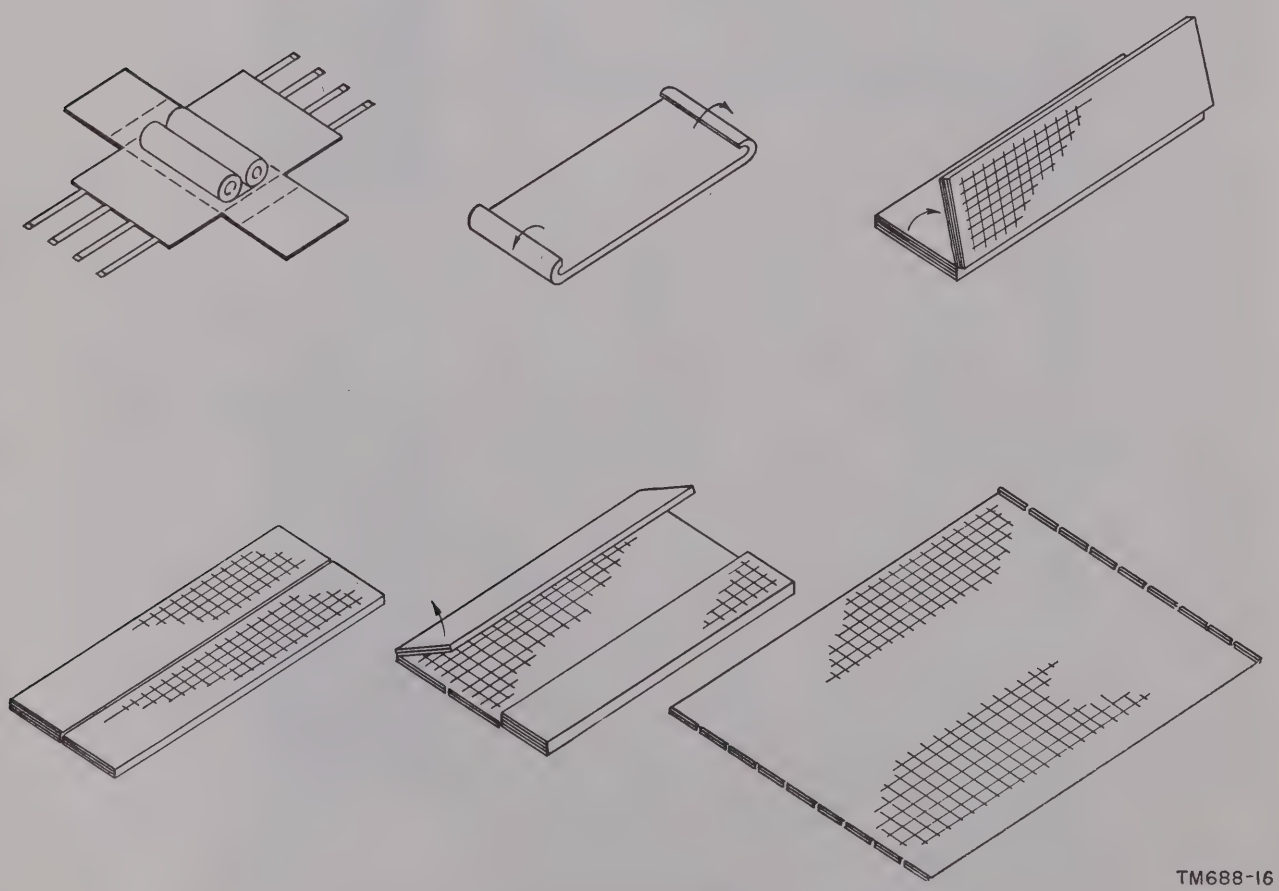

Figure 8. Unfolding Adcock antenna counterpoise.

14. Description of Whip Antenna Assemblies
(fig. 9)

Two whip antenna assemblies are supplied, one is used with the intercept receiver and the other is used with the communication receiver. Each whip antenna assembly consists of Mast Sections MS–116–A, MS–117–A, and MS–118–A and Mast Base AB–15/GR. The three 39½-inch long mast sections screw into one another and into the mast base to form a vertical antenna which is 10 feet 2¼ inches high. Mast Section MS–116–A is three-eighths inch in diameter. Mast Section MS–117–A tapers from eleven thirty-seconds inch to one-fourth inch in diameter, and Mast Section MS–118–A tapers from seven thirty-seconds inch to one-eighth inch in diameter. Mast Base AB–15/GR has a coaxial connector for the antenna cable to the receiver.

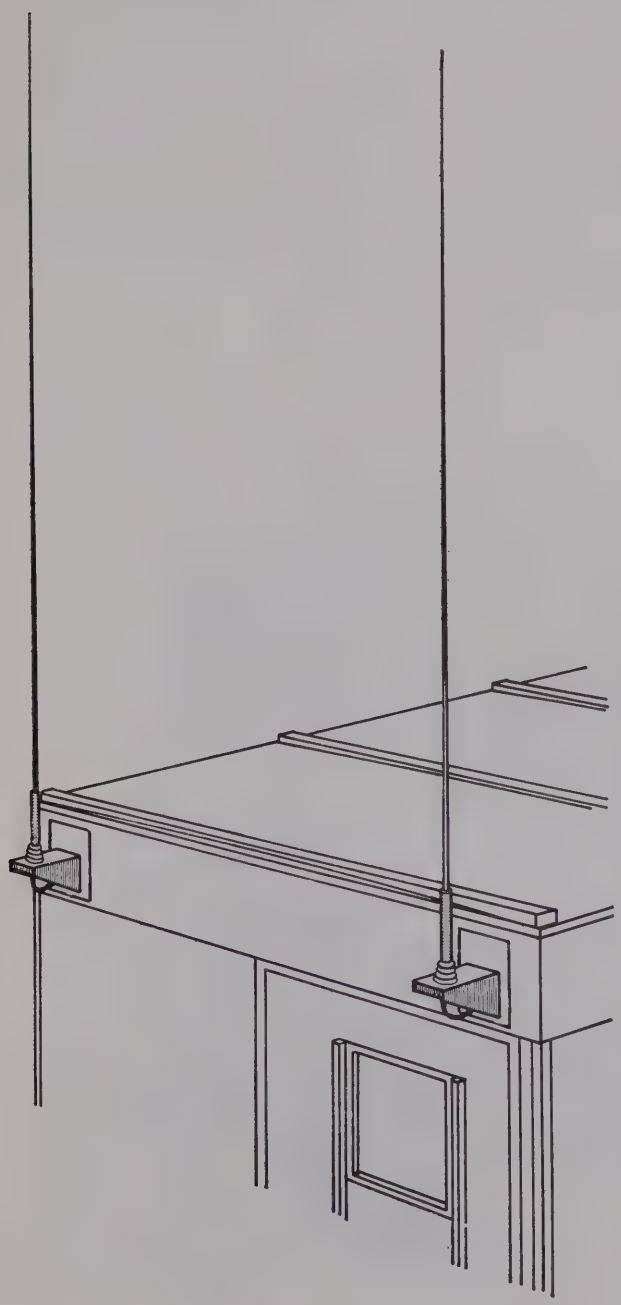

Figure 9. Whip antennas.

15. Description of Radio Frequency Transmission Line Switch SA–346/GRD (Rf Switch)
(fig. 10)

The radio-frequency (rf) switch is a two-position switch assembly located on top of the electrical equipment cabinet (fig. 13). Its purpose is to select the direction finder (df) receiver input either from the signal goniometer or from the rf amplifier.

a. When the R.F. SWITCH is in the GONIOMETER position, the signal starts in either the Adcock or crossed-loop antenna, depending on which antenna cables have been connected to the signal goniometer.

Note. The ANT. SELECT. switch on the rf amplifier must be placed in the CROSSED LOOP position to complete the circuit when the cables from the crossed-loop antenna are connected to the signal goniometer.

Figure 10. Radio Frequency Transmission Line Switch SA–346/GRD.

b. When the rf switch is in the R.F. AMPLIFIER position, the signal may start at either the sense or single-loop antenna, depending on the setting of the ANT. SELECT. switch located on the rf amplifier. In the MONITOR position of the ANT. SELECT. switch, the signal starts at the sense antenna. In the SINGLE LOOP position of the ANT. SELECT. switch, the signal starts at the single-loop antenna.

16. Description of Switch Box SA–345/U (fig. 11)

a. Switch Box SA–345/U is a portable metal box 8½ inches high, 11¼ inches wide, and 9 inches deep, which houses a heavy duty 60-ampere, two-pole, four-position rotary switch. It is used to connect the output of any one of three power sources (115/230 volts, 50 to 60 cycles per second (cps)) to Direction Finder Set AN/TRD–4A. Four additional sets of terminals are available for connecting four other equipments if desired. Two convenience outlets for electrical accessories are also provided.

b. At the bottom of the switch box, openings for three input cables and five output cables are provided and equipped with clamps. The cable terminals connect to 5/16-inch screw-type posts on two terminal boards inside the switch box. To facilitate attachment of the cables, the top and side covers of the switch box may be readily removed by unhooking the four spring clamps. The switch knob and convenience receptacles are recessed into the front of the switch box for protection. Two handles and two straps are provided to permit carrying the switch box and attaching the switch box to a stake driven into the ground or to the side of a trailer associated with the power unit (fig. 30).

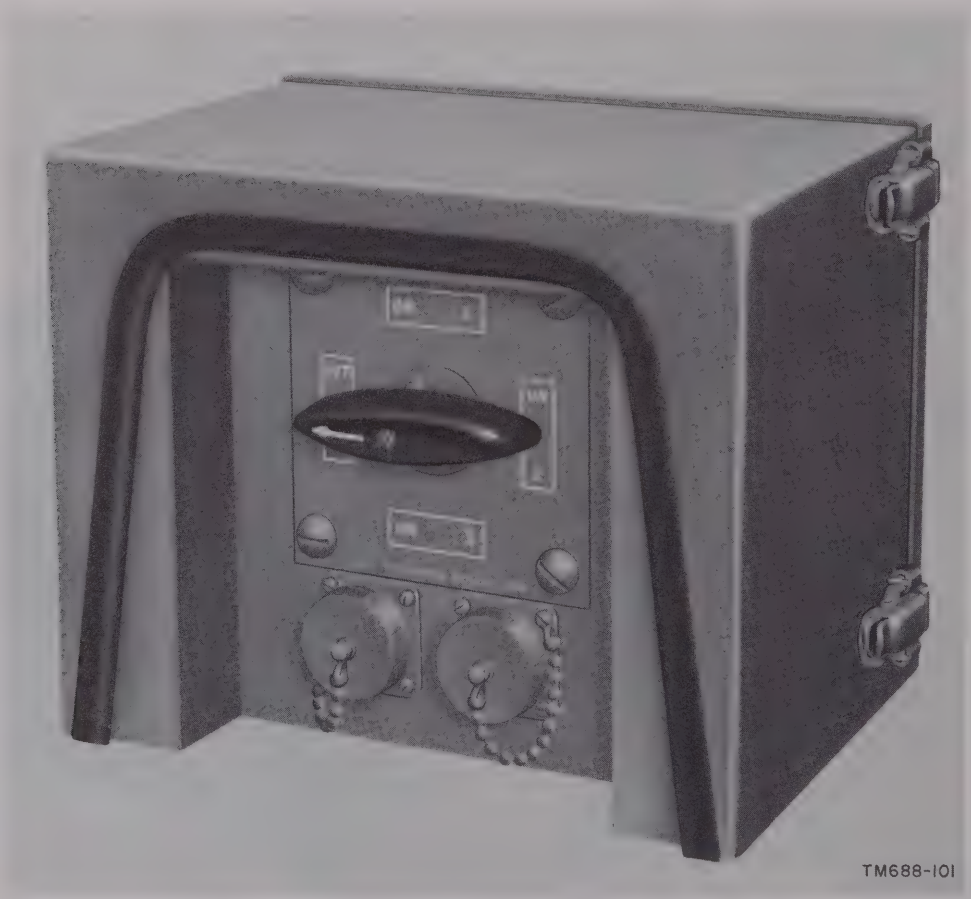

Figure 11. Switch Box SA–345/U.

17. Description of Junction Box J–95B/CRD–2 (fig. 12)

Junction Box J–95B/CRD–2 acts as a control and distribution point for the power fed from either the mobile power units or a commercial power source to the electronic equipment. The junction box contains an autotransformer with an OUTPUT VOLTAGE CONTROL for adjusting the output voltage to 115 volts when there is not more than 10-per cent variation of input voltage (103 to 127 v. or 207–253 v.). A LINE FREQUENCY meter, an OUTPUT VOLTAGE meter, CIRCUIT BREAKERS, LINE INPUT and OUTPUT LOAD switches are located in recessed front panels. Dummy load resistors, capable of dis-

Figure 12. Junction Box J–95B/CRD–2.

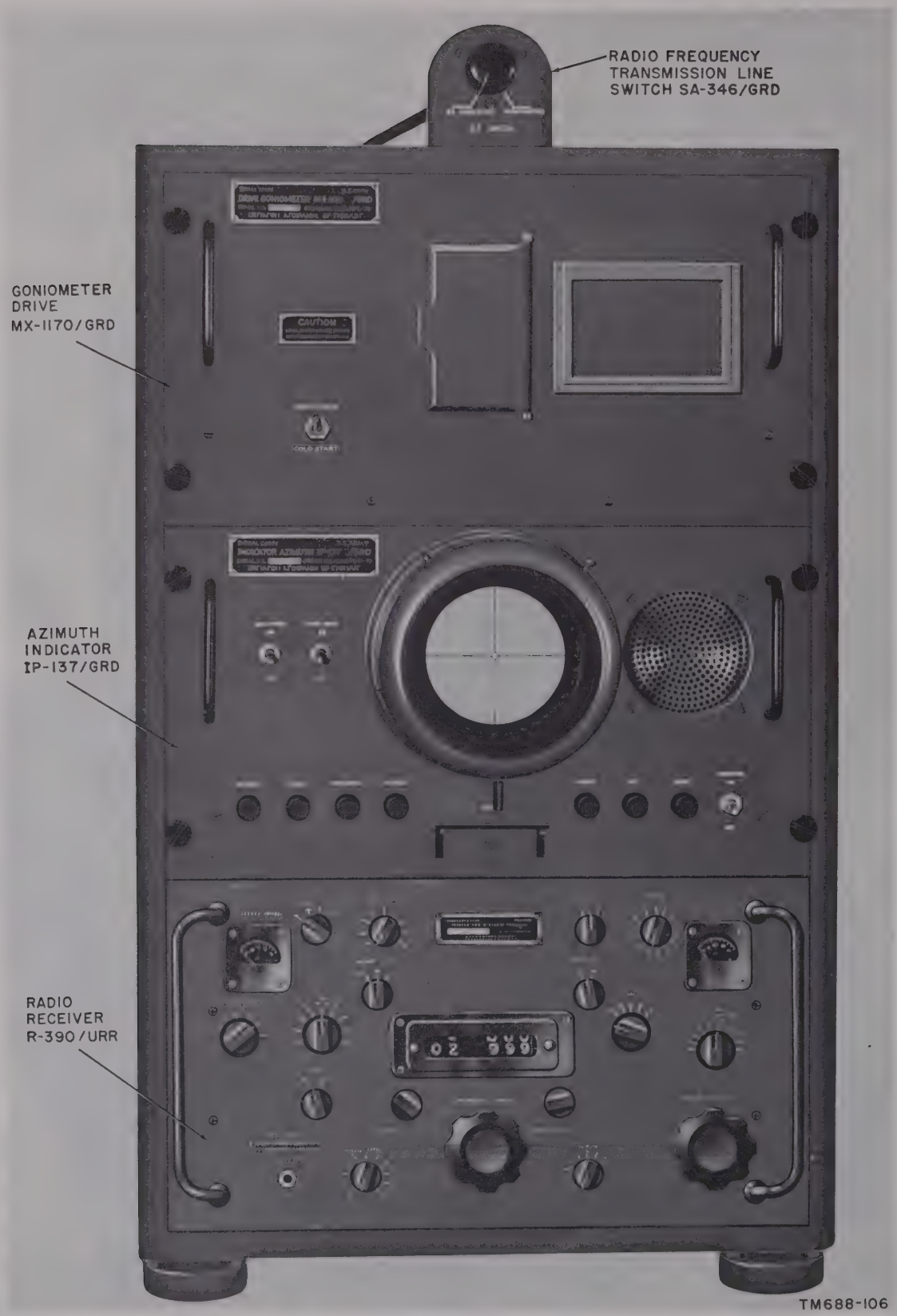

Figure 13. Electrical Equipment Cabinet CY-1426/U. components installed.

sipating 400 watts, are provided in the junction box. These resistors serve as a load while making preliminary adjustments to allow the line voltage to be adjusted to 115 volts before it is applied to the electronic equipment. One 115-volt ac input connector and one 230-volt ac input connector are provided on one side of the junction box and five ouput connectors are provided on the opposite side.

Warning: The heater, blower, and convenience outlets must be disconnected at the terminal box when a 230-volt power source is used (fig. 92).

18. Description of Electrical Equipment Cabinet CY–1426/U
(fig. 13)

Electrical Equipment Cabinet CY–1426/U is a reinforced steel frame approximately 21 inches wide, 34¾ inches high, and 20 inches deep.

a. Openings 10 by 23 inches on each side of the rack provide access to the cable connections on the various chassis. Removable perforated metal screens inclose the sides and allow adequate cross ventilation of the cabinet. Four shock mounts are secured to the bottom of the electrical equipment cabinet. Holes located at the upper rear of each side are used for additional shock mounts.

b. The rear of the rack is inclosed by louvered panels and two cable entrance doors. Goniometer Drive MX–1170/GRD, Azimuth Indicator IP–137/GRD, and Radio Receiver R–390/URR (df receiver) are mounted in the electrical equipment cabinet.

c. The rf switch is mounted on top of the electrical equipment cabinet.

19. Description of Goniometer Drive MX–1170/GRD
(fig. 14)

a. The goniometer drive is the assembly that provides the means for turning the rotors of the signal goniometer and the indicator goniometer simultaneously. A bearing indicator scale which is protected by a door on the front panel of the goniometer drive is calibrated in degrees. The bearing indicator scale is used for aural-null operation and is directly coupled to the goniometer rotors that are driven by a 1/15-horsepower electric motor through a pulley and a belt arrangement.

b. The assembly mounts on a chassis 12 11/16 inches by 17 3/16 inches with a standard rack mounting panel 19 inches wide by 10½ inches high. The goniometer drive is mounted in the top compartment of Electrical Equipment Cabinet CY–1426/U (fig. 13). Built-in slides permit the unit to be pulled forward when changing the signal goniometer or when making orientation adjustments.

c. The unit houses the goniometer drive motor, drive assembly, bearing indicator scale, signal goniometer, and indicator goniometer.

(1) Goniometer drive motor B701 is a 1/15-horsepower, induction-type motor that drives the bearing indicator scale, signal goniometer rotor, and indicator goniometer rotor.

(2) The drive assembly couples the mechanical output of the goniometer drive motor to the bearing indicator scale and the goniometer rotors.

(3) The bearing indicator scale is calibrated in degrees and indicates the bearing of a transmitter when the equipment is being operated in the aural-null mode.

(4) Electrical Goniometer GO–5/GRD or GO–6/GRD may be used as the signal goniometer, depending on the frequency. The signal goniometer resolves the signals from the antennas into one component which is coupled to the df receiver.

(5) Electrical Goniometer GO–5/GRD is used as the indicator goniometer. The indicator goniometer resolves the signal from the df receiver back into two components that are applied to the deflection plates of the cathode-ray tube. The indicator goniometer is located on the left side of the goniometer drive unit.

20. Description of Electrical Goniometers GO–5/GRD and GO–6/GRD
(fig. 15)

a. The signal and indicator goniometers are cylindrical units that are end-mounted and have one flat side that serves as a back plate for connectors and a switch. Mounted on the end of the rotor shaft is a cylindrical coupling with a spring-loaded plunger used to engage the rotor shaft with the goniometer drive.

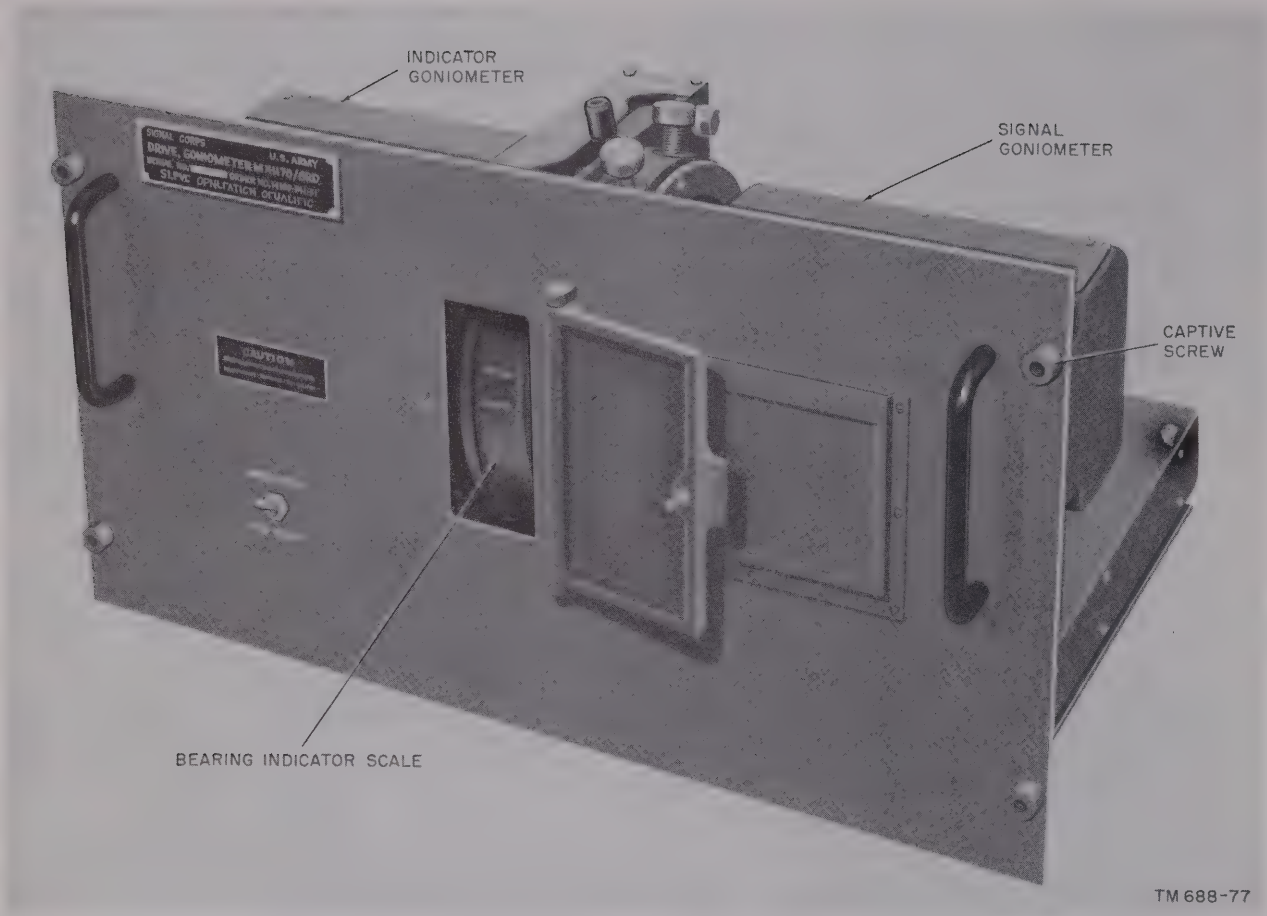

Figure 14. Goniometer Drive MX–1170/GRD.

b. Internally, each signal and indicator goniometer contains two stator windings, a rotating armature with a rotor winding, and a rotary transformer. In addition, there is a sense phasing network of resistors and capacitors, and in Electrical Goniometer GO–6/GRD, an inductor. A sense relay, signal input and output connectors, a relay excitation connector, and a SENSE PHASE switch on the backplate complete the unit. Each unit is 5½ inches high by 4½ inches wide by 8½ inches long.

c. Three goniometers are provided, one high-frequency (GO–6/GRD) and two low-frequency (GO–5/GRD) types. A low-frequency goniometer is used as the indicator goniometer (or resolver). Either a high- or low-frequency goniometer may be used for the signal goniometer, depending on the frequency of the received signal. For signals in the range of .54 to 10 mc, a low-frequency goniometer is used and for signals in the range of 8 to 30 mc, a high-frequency goniometer is used. The signal goniometer combines the outputs of the north-south and east-west antennas into one signal that is fed to the df receiver; the indicator goniometer resolves the signal back into two components of proper phase and amplitude, which are applied to the horizontal and vertical deflection plates of the azimuth indicator cathode-ray tube. The external appearance of Electrical Goniometer GO–5/GRD is illustrated in figure 15. Figures 125 and 126 are schematic diagrams for Electrical Goniometers GO–5/GRD and GO–6/GRD.

21. Description of Azimuth Indicator IP–137/GRD

(fig. 16)

a. Azimuth Indicator IP–137/GRD consists of a chassis 17 by 17 inches with a standard rack mounting control panel 19 inches wide by 10½ inches high, complete with 10 tubes including a 5-inch cathode-ray tube. The operating controls, df receiver loudspeaker, power

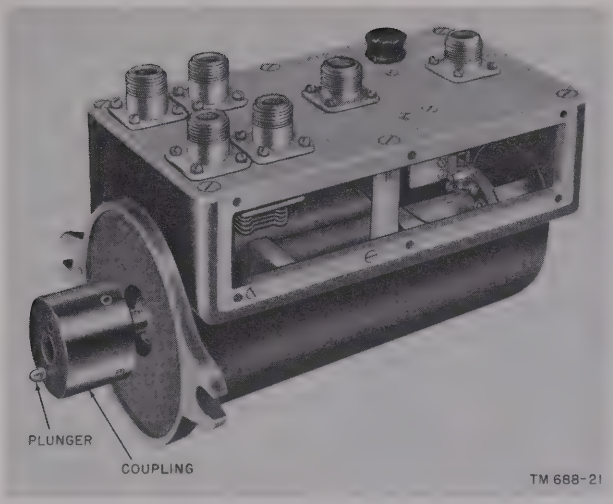

Figure 15. Electrical Goniometer GO–5/GRD.

control switches and alidade scale assembly are mounted on the front panel. The azimuth indicator accommodates the connectors for and controls the application of line power to all components in the electrical equipment cabinet. Additional receptacles for interconnecting the azimuth indicator, df receiver, and goniometer drive assembly are available at the rear of the chassis. The azimuth indicator includes a self-contained regulated 275-volt B+ power supply and a -2,000-volt high-voltage power supply for the cathode-ray tube. The -2,000-volt potential is supplied by one replaceable unit designated as Power Supply PP–988/GRD (fig. 105). The input voltage requirements are 115 volts, 50 to 60 cps and the power consumption is 100 watts. The azimuth indicator fits into the center compartment of the electrical equipment cabinet (fig. 13) and is held in place by four captive screws. Handles are provided to facilitate removal of the azimuth indicator for servicing.

b. The azimuth indicator is provided with an alidade and a lighted azimuth scale around the 5-inch cathode-ray tube. The rotatable alidade embodies cross hairs to facilitate reading the

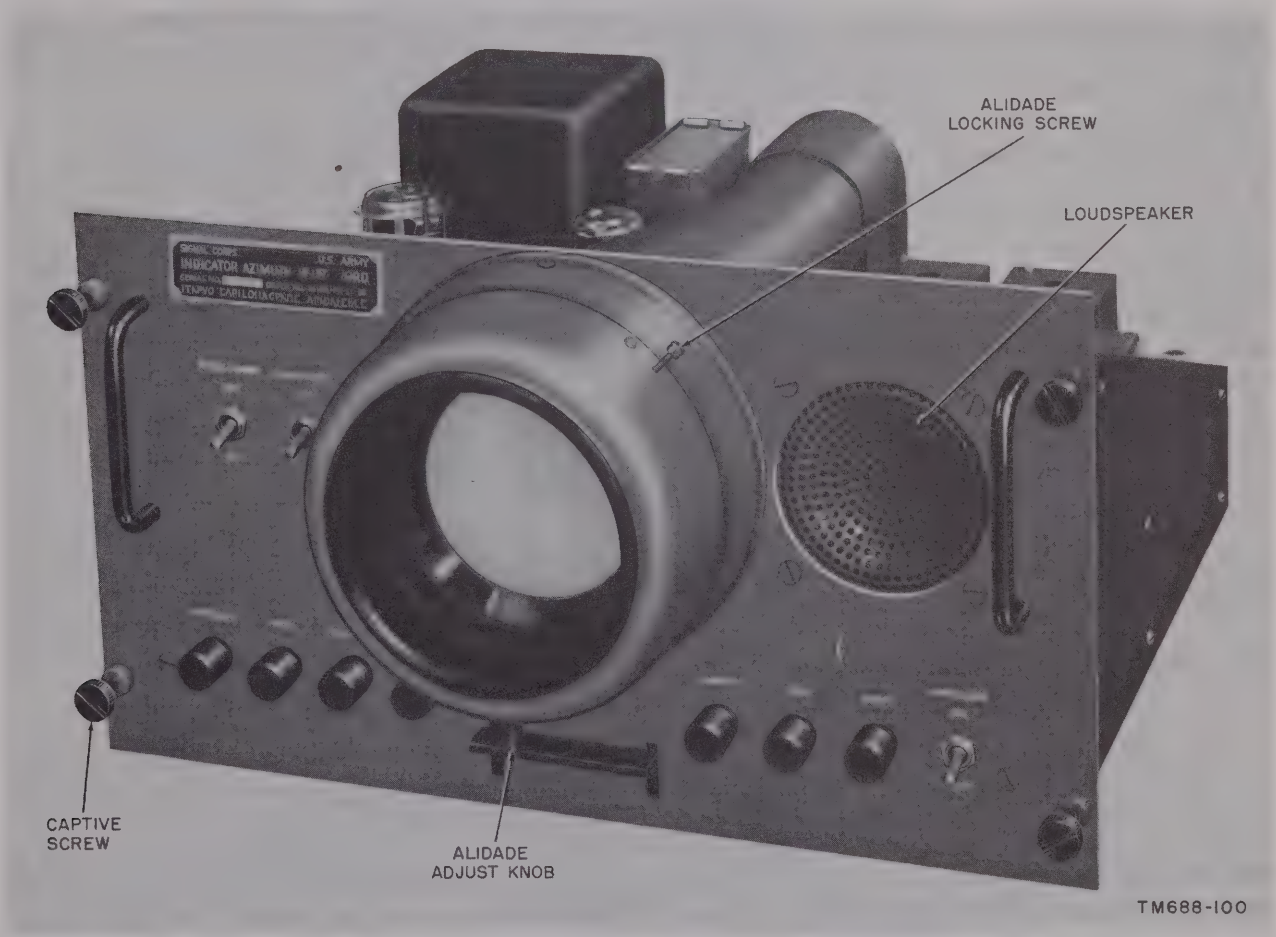

Figure 16. Azimuth Indicator IP–137/GRD.

bearings and is equipped with a light shield. The alidade assembly enables accurate bearing and sense determination from the propeller-shaped visual display.

22. Description of Radio Receiver R–390/URR
(fig. 13)

a. Radio Receiver R–390/URR is a 33-tube general purpose radio receiver with a self-contained power supply that operates from a 115-volt, 50- to 60-cps, ac power source. The operating controls, CARRIER LEVEL and LINE LEVEL meters, PHONES jack, and an accurate frequency indicating dial, are located on the front panel. Power input and output connectors, operating and spare fuses, tube pullers, and pin straighteners are located on the back panel. Radio Receiver R–390/URR is composed of a main frame, front panel, back panel, and seven subchassis.

b. The radio receiver is designed for mounting in a 19-inch rack. Two handles are provided at the outer edge of the front panel to facilitate withdrawal of the radio receiver from the rack or case. Three Radio Receivers R–390/URR are provided with Direction Finder Set AN/TRD–4A. One of the receivers, used as the df receiver, is mounted in the bottom compartment of the electrical equipment cabinet (fig. 13). One of the receivers, used as the intercept receiver, is provided installed in a cabinet that is mounted on top of the operating table, to the left of the electrical equipment cabinet (23, fig. 19). The other receiver, used as the communication receiver, is provided installed in a cabinet that is mounted on top of the operating table, to the right of the electrical equipment cabinet (18, fig. 19).

c. Instructions for the installation, operation, and maintenance of the receivers are contained in TM 11–856, Radio Receiver R–390/URR.

23. Description of Radio Frequency Amplifier AM–496/TRD–4
(fig. 17)

a. Radio Frequency Amplifier AM–496/TRD–4 is a three-tube preamplifier used during single-loop, aural-null operation. The case that contains the preamplifier is a housing for the shaft, bearings, and slip rings for the crossed-loop and sense antennas and is also a mounting for the antennas. The rf amplifier is attached to the ceiling of the shelter and the antenna mounting section extends above the roof. An ANT. SELECT. switch built into the unit allows the loop antennas to be used for either rotatable single-loop, aural-null operation with the rf amplifier, or fixed crossed-loop operation. A hand wheel and an azimuth scale are provided for manually rotating the loop during single-loop, aural-null operation. The over-all dimensions of the case are approximately 22⅜ inches high by 6⅝ inches deep.

b. The self-contained power supply is designed for operation from a 115-volt, 50- to 60-cps ac power source. The power consumption is 18 watts. The output impedance of the rf amplifier is 100 ohms and the frequency range is from .54 mc to 30 mc in five bands.

c. The antenna base consists of a rotatable portion and a fixed portion. The rotatable portion is connected by a shaft to a handwheel in the shelter. The fixed portion is supported in a fixed position relative to the shelter roof. The rotatable portion contains the sockets for the four legs of the crossed-loop antenna and for the single-loop sense antenna.

24. Description of Radio Transmitter T–279/UR
(fig. 18)

a. Radio Transmitter T–279/UR is a self-contained, battery-powered portable unit used as a target transmitter or signal source for calibrating and checking the operation of the direction finder equipment in the field. The radio transmitter emits a low-power, continuous-wave (cw) or modulated continuous-wave (mcw) signal. For identification of the signal, an audio-frequency (af) *tick* is superimposed on the rf signal approximately every 2 seconds. The radio transmitter feeds a monopole antenna mounted on the top of the radio transmitter case. The radio transmitter normally rests on the ground during operation.

b. All component parts including the batteries are housed in a sheet steel case. A hinged cover on top of the case protects the operating controls that are located on the top panel. The hinged cover is splashproofed by means of a rubber gasket around the edge and is equipped with a metal carrying handle. A neon lamp, which is part of the ticking circuit, is located

Figure 17. Radio Frequency Amplifier AM–496/TRD–4.

on the top panel and is used as a power on indicator.

c. The antenna consists of five telescoping chromium-plated brass sections, adjustable to a 5-foot length. The telescoped sections may be stored within the base by sliding the sections through the insulated bushing mounted on the top panel. Splashproofing of the feedthrough bushing is accomplished by a rubber seal. A spring clip under the insulator makes contact with the antenna to hold it in position and also to connect it to the transmitter circuits.

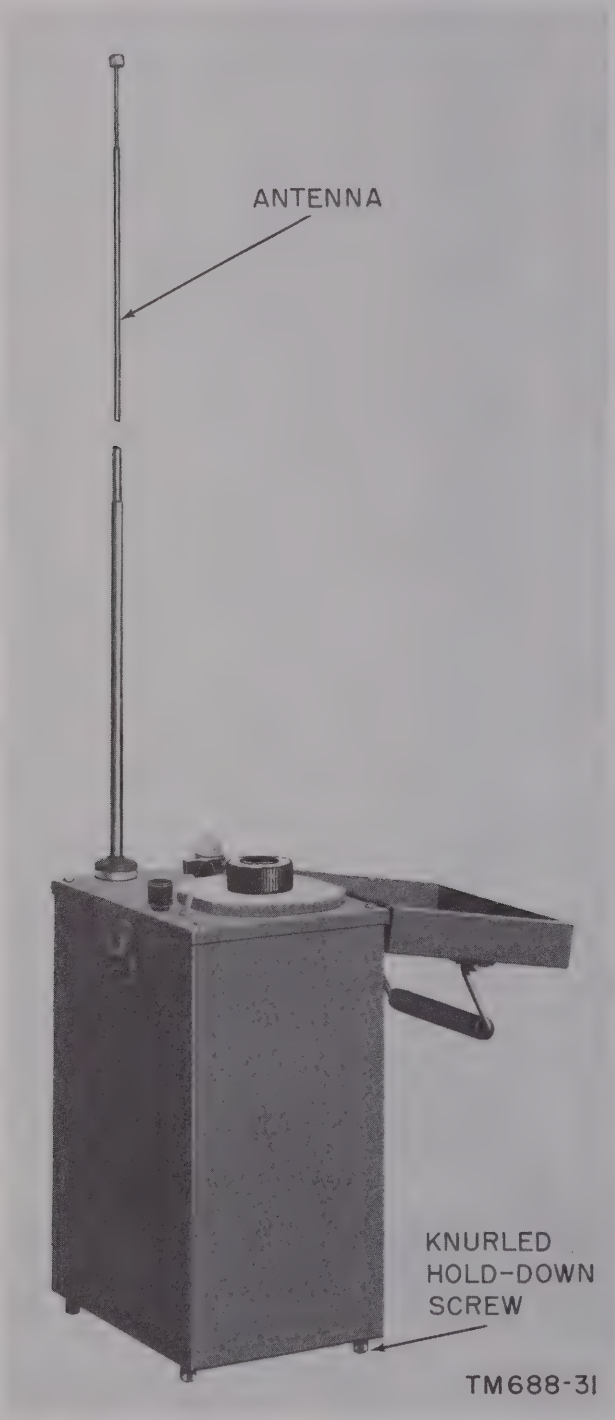

Figure 18. Radio Transmitter T–279/UR.

d. One 135-volt Battery BA–424/U and one 1.5-volt Battery BA–404/U supply the power for the radio transmitter. The 1.5-volt *A* battery supplies the required filament power. The 135-volt *B* battery supplies all operating potentials for the remaining circuits. The batteries are not supplied with the radio transmitter and must be requisitioned. Directions for installing the batteries are outlined in paragraph 42.

25. Description of Shelter S–44A/G
(figs. 19 and 20)

Shelter S–44A/G is a knock down-type field and mobile shelter used to house all the equipment of Direction Finder Set AN/TRD–4A except the generator sets and to provide room for three operators. The outside of the shelter is 139 inches long by 74 inches square; it will fit in the cargo body of a 2½-ton 6x6 truck. Four tow rings, one at each lower corner, and four tie-down fittings at each upper corner are provided. The upper fittings hinge outward to keep the hold-down bars away from the shelter sides.

a. Shelter. The shelter consists of a one-piece rigid floor and a one-piece top section joined by wall panels. Two doors and four windows are equipped with screens and blackout blinds; a blackout curtain is included for one door.

b. Roof and Corner Sections. The roof section and four corner sections embody metal screening that forms a shield which minimizes loop errors caused by reradiation from electrostatic and electromagnetic fields generated within the shelter.

c. Ventilating System. The ventilating system consists of a motordriven blower (13, fig. 19) mounted in the roof section of a manually operated blower outlet opening. Two lightproof adjustable louvers, equipped with removable filters, filter the intake air.

d. Shelter Electrical System. Two raceways with 16 receptacles for 115-volt, 60-cps, ac service are provided on the shelter ceiling. These receptacles comprise 12-plug receptacles and four midget twist-lock receptacles. The

wiring for the raceway terminates in two manual reset-type overload circuit breakers rated at 35 amperes, 120 to 240 volts ac. The circuit breakers (28, fig. 19) are located near the ceiling in a junction box. The ventilating blower and the heater, both operating on 115 volts, are plugged into the nearest ceiling receptacle.

e. Shelter Heater Unit (16, fig. 19). The shelter heater unit is mounted on a modified end panel of the shelter. The heater is used to maintain a comfortable working temperature within the shelter in cold weather. The unit consists of a heater, inlet louver, exhaust pipe, fuel tank, fuel line, fuel drain, and water trap drain.

(1) The heating unit is a gasoline-burning, electrically operated space heater. The heater operates from a 115-volt, 50- to 60-cps, ac power source. The heater is rated to deliver 60,000 British thermal units per hour. The overall dimensions of the heater cabinet are approximately 28 inches high, 11 inches deep, and 24¼ inches long. Outside air may be drawn in through the louver in the shelter wall or inside air may be drawn through the grill in front of the cabinet near the top and warm air discharged at the front of the cabinet near the floor.

(2) The unit can also be used for ventilation in which case only the heater ventilating fan motor is in operation.

(3) The heater is fully described in the manual shipped with the heater.

f. Loading Skids (13, fig. 20). The two loading skids are made of high-tensile steel. Each skid has a hook at one end to secure the

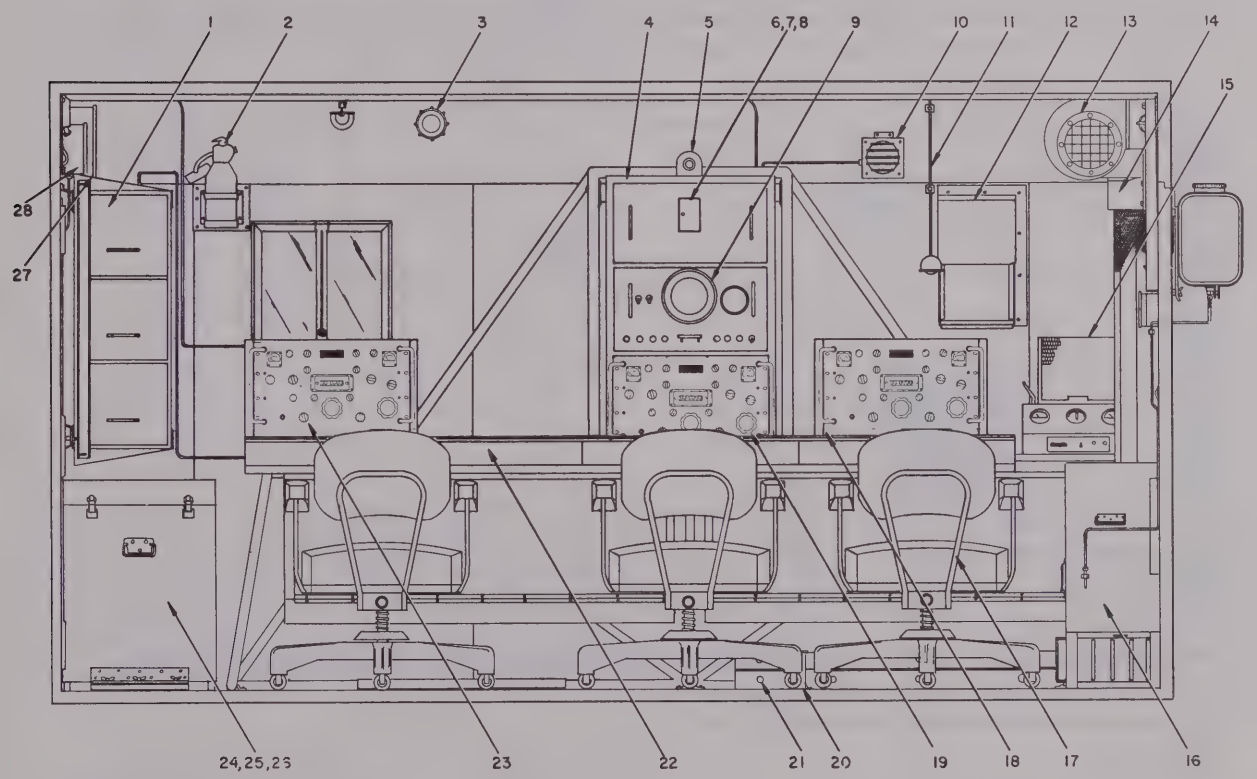

1 Storage cabinet
2 Fire extinguisher
3 Lamp
4 Electrical Equipment Cabinet CY-1426/U
5 Radio Frequency Transmission Line Switch SA-346/GRD
6 Goniometer Drive MX-1170/GRD
7 Electrical Goniometer GO-5/GRD
8 Electrical Goniometer GO-6/GRD
9 Azimuth Indicator IP-137/GRD
10 Loudspeaker LS-166/U
11 Desk lamp
12 Radio Transmitter T-279/UR (stowed)
13 Blower
14 Antenna Base MT-865/GR (stowed)
15 Junction Box J-95B/CRD-2
16 Heater
17 Operator's chair
18 Communication receiver
19 Df receiver
20 Ladder strap and buckle assembly
21 Ladder
22 Operating table
23 Intercept receiver
24 Cable Payout Reel RL-174/G (stowed)
25 Cable Assembly Set CG-1097/TRD-4 (2 sets)
26 Electrical Power Cable Assembly CX-2380/U
27 Terminal box
28 Circuit breaker

Figure 19. Location of equipment in shelter, left side.

skid to the tailgate hinge pin of a 2½-ton 6 x 6 cargo truck.

g. Ladder (21, fig. 19). The 8-foot ladder folds at the center and has fittings to permit it to be locked in either the open or closed position.

h. Tools. One ½-inch wrench used to operate the fasteners and one screwdriver are provided.

i. Joining Cover (11, fig. 24). The mildew-resistant canvas joining cover provides a means of joining two shelters end-to-end to form a larger inclosure. The joining cover is not used for this purpose in Direction Finder Set AN/TRD-4A but is supplied in the interest of shelter standardization.

j. Hold-Down Bars (14, fig. 20). Four adjustable hold-down bars are provided to secure the shelter when it is mounted on or while it is being transported in a 2½-ton 6 x 6 cargo truck. One end of a bar is hooked into a tie-down fitting on the roof section and the other end is hooked over the side board of the truck. The length of the bar is adjusted by means of the turnbuckle. Hold-down bar extensions (15, fig. 20) are provided to lengthen the bar by 10 inches.

k. Additional Information. Instructions for the installation, operation, and maintenance of the shelter are contained in TM 11-2599, Shelters S-44/G and S-44A/G. The location of the equipment in the shelter is illustrated in figures 19 and 20.

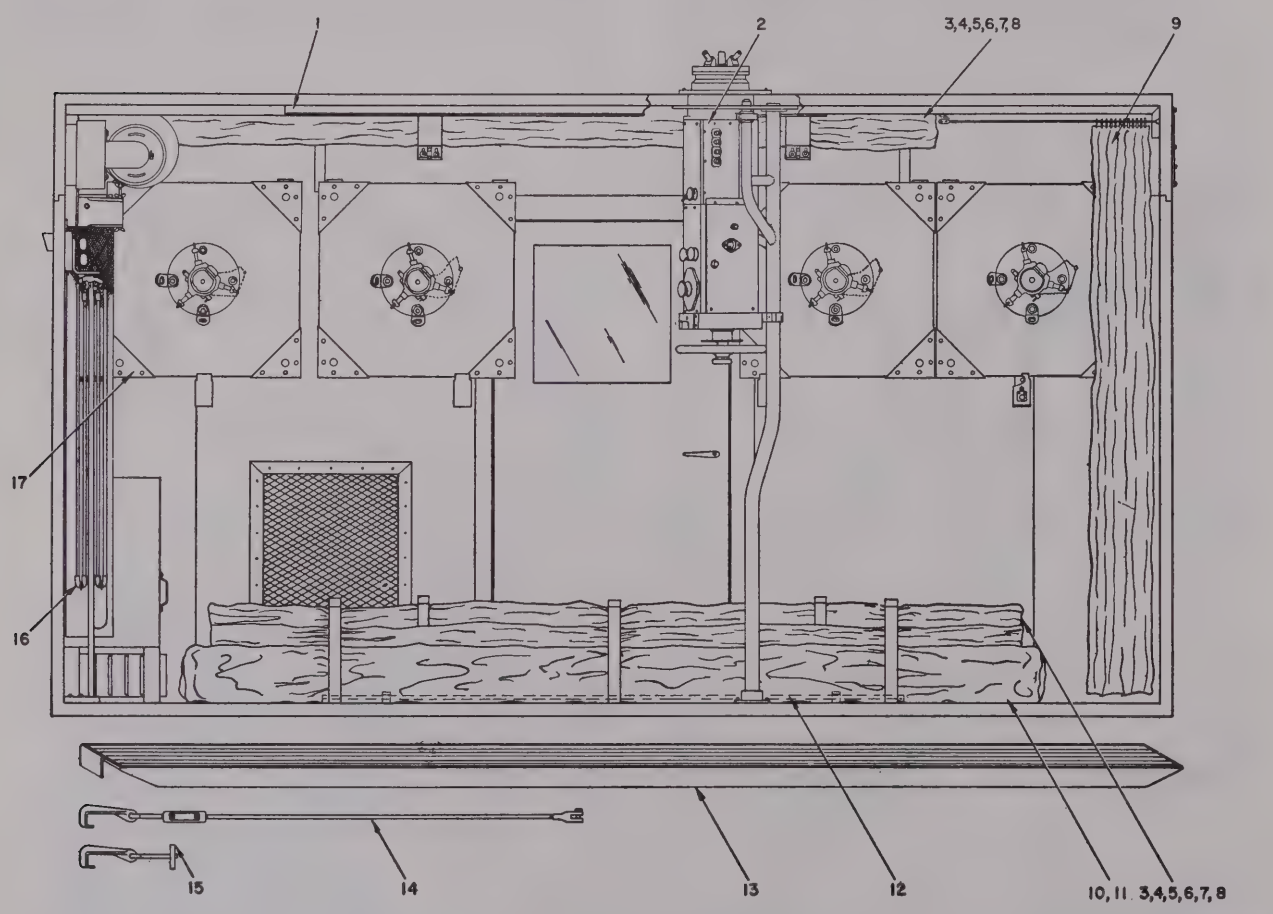

1 Convenience outlets
2 Radio Frequency Amplifier AM-496/TRD-4
3 Antenna Section AT-445/GR (5 ea stowed)
4 Antenna Section AT-444/GR (5 ea stowed)
5 Antenna Section AT-443/GR (5 ea stowed)
6 Antenna Section AT-442/GR (5 ea stowed)
7 Antenna Loading Disk MX-1168/GR (5 ea stowed)
8 Antenna mast container (5 ea)
9 Blackout curtain
10 Counterpoise MX-1169/GRD (stowed)
11 Counterpoise container (stowed)
12 Ground rods (5 ea stowed)
13 Loading skids (2 ea)
14 Hold-down bars (4 ea)
15 Hold-down bar extensions (4 ea)
16 Antenna AT-297/TRD-4 (stowed)
17 Antenna Base MT-865/GR (4 ea stowed)

Figure 20. Location of equipment in shelter, right side.

26. Description of Cords and Cables

a. General. Most of the cords and cables supplied with Direction Finder Set AN/TRD–4A are permanently installed in the shelter, several external cables are contained in Cable Payout Reel RL–174/U (fig. 21), and the spa e cables are stowed in the storage bins under the operating table. The cable check chart (par. 43) lists the function of each cable and indicates in the *Remarks* column whether the cable is normally installed or contained in the cable payout reel.

b. Radio Frequency Cable Assembly CG–1078/U (2 ft 6 in.). This cable assembly consists of 2 feet 6 inches of Radio Frequency Cable RG–13A/U with a Radio Frequency Plug UG–21B/U on each end. Four of these cable assemblies (W401), W402, W403, and W404) are provided.

c. Radio Frequency Cable Assembly CG–1079/U. This cable assembly consists of Radio Frequency Cable RG–22B/U with a Plug Connector UG/421–U on each end. Five of these cable assemblies are provided and distinguished by different lengths.

(1) One 8-foot 6-inch cable assembly (W205) is provided.
(2) One 2-foot 10-inch cable assembly (W405) is provided.
(3) Two 2-foot cable assemblies (W501 and one spare) are provided.
(4) One 3-foot 5-inch cable assembly (W304A) is provided.

d. Cable Assembly Set CG–1097/TRD–4 (170 ft). This cable assembly set consists of two electrically matched cables. Each cable consists of 170 feet of Radio Frequency Cable RG–13A/U with Radio Frequency Plug UG–21B/U on each end. Four sets are provided, one set consists of W101 and W102, one set consists of W103 and W104, and the other two sets are spares.

e. Cable Assembly Set CG–1098/TRD–4 (9 ft). This cable assembly set consists of two electrically matched cables. Each cable consists of 9 feet of Radio Frequency Cable RG–13A/U with Radio Frequency Plug UB–21B/U on each end. Three sets are provided, one set consists of W201 and W202, one set consists of W203 and W204, and the other set is a spare.

f. Radio Frequency Cable Assembly CG–1379/U (14 ft 6 in.). This cable assembly consists of 14 feet 6 inches of Radio Frequency Cable RG–13A/U with Plug PL–259/U at one end and a Plug Connector UG–573/U at the other end. Two of these cable assemblies (W1007A and W1008A) are provided.

g. Cord CG–409E/U (2 ft 3 in.). This cord consists of 2 feet 3 inches of Radio Frequency Cable RG–58C/U with a Radio Frequency Plug UG–88C/U at each end. One of these cords (W303A) is provided.

h. Electrical Power Cable Assembly CX–2377/U (2 ft 3 in.). This cable assembly consists of 2 feet 3 inches of two-conductor cable with a female plug #AN–3108A–14S–9S on one end and two soldering lugs on the other end. One of these cable assemblies (W302) is provided.

i. Electrical Power Cable Assembly CX–2378/U (3 ft). This cable assembly consists of 3 feet of 2-conductor cable with a female plug #AN–3106A–12S–3S on one end and a male plug #AN–3108A–12S–3P on the other end. Two of these cable assemblies (W301 and one spare) are provided.

j. Electrical Power Cable Assembly CX–2379/U (2 ft 6 in.). This cable assembly consists of 2 feet 6 inches of four conductor cable with a female plug #AN–3106A–14S–5S on one end and a male plug #AN–3108A–14S–5P on the other end. One of these cable assemblies (W701) is provided.

k. Electrical Power Cable Assembly CX–2380/U (20 ft). This cable assembly consists of 20 feet of two-conductor cable with two terminal lugs on each end. Four of these cable assemblies (W801, W802, W803, and one spare) are provided.

l. Electrical Power Cable Assembly CX–2381/U (.ft). This cable assembly consists of two-conductor cable with a Harvey Hubbell connector No. 7238 at one end and a Harvey Hubbell connector No. 7224 at the other end. Two of these cable assemblies are provided, one (W901) is 8 feet and the other (W902) is 10 feet long.

m. Electrical Power Cable Assembly CX–2382/U (10 ft). This cable assembly consists of a two-conductor cable with a Harvey Hubbell connector No. 7224 on one end and two terminal lugs on the other end. One of these cable assemblies (W903) is provided.

n. Electrical Power Cable Assembly CX–2383/U (ft in.). This cable assembly con-

sists of two-conductor cable with a Harvey Hubbell connector No. 7224 on one end and two terminal lugs on the other end. Two of these cable assemblies are provided, one which is 16 feet long and is used as W1001 and the other which is 3 feet 4 inches long and is used as W1002.

o. Electrical Power Cable Assembly CX–2384/U (9 ft). This cable assembly consists of 9 feet of two-conductor cable with terminal lugs on one end and the other end is unprocessed. One of these cable assemblies is provided and used as W1003.

Figure 21. Cable Payout Reel RX–174/G.

27. Description of Minor Components

a. Compass (fig. 27). For orienting the Adcock antenna and the loop antennas during installation, a compass, a ball and socket, and an adapter are furnished.

b. Tripod (7, fig. 24). A tripod is used with the compass to orient the Adcock antenna with true or magnetic north during installation.

c. Operator's Chairs (17, fig. 19). Three office-type chairs for the operators are furnished with Direction Finder Set AN/TRD–4A.

d. Cable Payout Reel RL–174/G (fig. 21). The cable payout reel supplied with Direction Finder Set AN/TRD–4A is a cable reel mounted in its own transport case. The cable payout reel facilitates laying and rewinding of the main power cable and Adcock antenna cables.

e. Storage Cabinet (1, fig. 19). A storage cabinet with three drawers is provided on one end wall of the shelter. The equipment stored in these drawers is as follows:

(1) The equipment stored in the bottom drawer is illustrated in figure 22.
(2) The equipment stored in the middle drawer is as follows:
  (*a*) Receiver spares (par. 28*e*)
  (*b*) Radio transmitter spares (par. 28*b*)
  (*c*) Headsets and cords (2 and 3, fig. 25)
  (*d*) Telegraph key (11, fig. 25)
  (*e*) Special tools kit (4, fig. 25)
(3) The equipment stored in the top drawer is as follows:
  (*a*) Azimuth indicator spares (par. 28*a*)
  (*b*) Rf amplifier spares (par. 28*c*)
  (*c*) Goniometer drive spares (par. 28*d*)

f. Operating Table (22, fig. 19). Most of the major components of the direction finder set mount on a pipe frame table secured to the shelter floor. The operating table includes storage bins underneath and an armrest along the front, with lift-up doors and storage spaces inside. These storage spaces and their contents are listed in (1), (2), and (3) below:

(1) Contents of the left side of the storage bin are shown in figure 23.
(2) Contents of the right side of the storage bin are shown in figure 24.
(3) Items of equipment stored in the armrest and middle drawer of the storage bin are shown in figure 25.

g. Tools. A set of tools for installing and repairing the direction finder set is included with the equipment (par. 88).

h. Gasoline Engine Generator Set PU–236/G. Two generator sets are supplied as part of Direction Finder Set AN/TRD–4A. Up to three generator sets may be used alternately in 8-hour shifts. Three generators allow one

standby unit and one unit to be serviced while the third is in use. Gasoline Engine Generator Set PU–236/G consists of Trailer M–105, Power Unit PU–58/G, and associated equipment. The power unit is a self-starting, 120/230-volt, 60-cps, single-phase, ac generator. Its rated capacity is 5 kilowatts at unity power factor, 6.25 kilovolt-amperes at 80 percent power factor. Refer to TM 11–980, Power Unit PU–58/G, for detailed information.

i. Other Components. In addition to the parts described in *a* through *h* above, Direction Finder Set AN/TRD–4A includes spare tubes, fuses and lamps, ground stakes, ground clamps, stake adapters, antenna container, counterpoise container, guy assembly, and Loudspeaker LS–166/U.

28. Running Spares

Note: The running spares listed in *h*, *i*, and *j* below are also listed in the table of components (par. 10).

a. Azimuth Indicator Spares.

Spare tubes.

1 type 5CP1B cathode-ray tube.
1 type 5R4WGY rectifier.
1 type 1Z2 rectifier.
1 type 6AS7 dual triode.
1 type 6005/6AQ5W pentode.
1 type 5750 pentagrid converter.
1 type 5693 pentode.
1 type OB2 voltage regulator.
1 type 5749 pentode.
4 type 1N69 crystal diodes.

Spare fuses.

6 Bussman type MDL 1.6-ampere fuses.
6 Bussman type MDL 1.25-ampere fuses.

Spare dial lamps.

3 Lamps LM–52.

b. Radio Transmitter Spares.

Spare tubes.

1 type 3A4 pentode.
1 type 3A5 dual triode.
1 type 1R5 pentagrid converter.

Spare lamp.

1 type JCG–991 neon bulb.

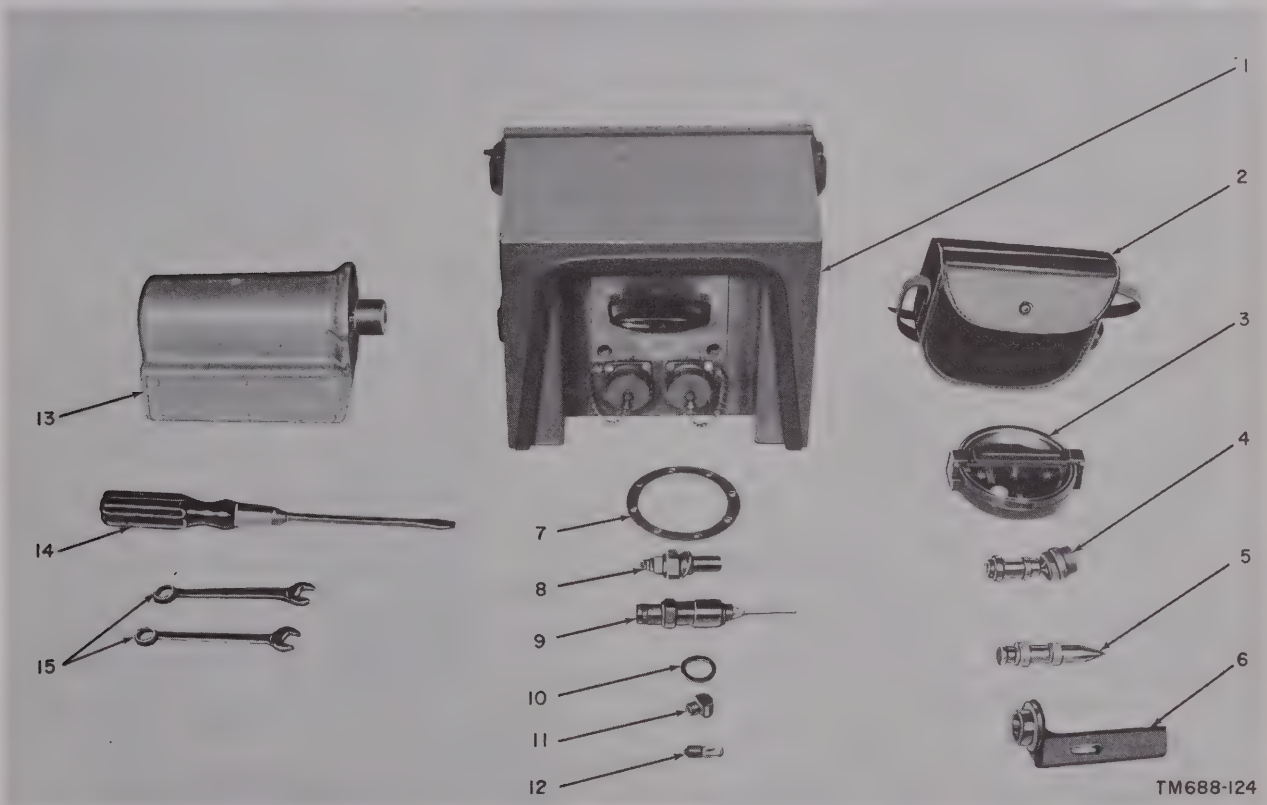

1 Switch Box SA–345/U
2 Compass carrying case
3 Compass
4 Ball and socket
5 Plumb bob
6 Rod level
7 Heater burner head gasket
8 Igniter plug
9 Glow plug
10 Filter bowl gasket
11 Fuel fitting
12 Lamp No. 1815
13 Electrical Goniometer GO–5 GRD
14 Screwdriver
15 Wrenches, ½-inch

Figure 22. Contents of storage cabinet, bottom drawer.

1 Electrical Power Cable Assembly CX-2380/U (20 ft)
2 Guy stakes and container
3 Hammer
4 Bag for counterpoise clamps
5 Grounding straps
6 Counterpoise clamps
7 Locating pins and container
8 Layout template chain
9 Guy stake adapter
10 Nylon guys
11 Bag for locating pins and layout template
12 Gag for guys
13 Telephone mounting bracket
14 Telephone EE-8-B
15 Skid rope 1¼-inch (100 ft)

Figure 23. Contents of storage bin, left side.

c. Rf Amplifier Spares.

Spare tubes.

1 type 6AU6 pentode.
1 type 6X4W rectifier.

Spare dial lamps.

2 Lamps LM–52.

Spare fuses.

6 Bussman type AGC ⅜-ampere fuses.

d. Goniometer Drive Spares.

Spare lamp.

1 Lamp LM–52.

e. Receiver Spares.

Spare tubes.

2 type 3TF7 voltage regulators.
6 type 6AJ5 pentodes.
2 type 6AK6 pentodes.
1 type 6BH6 pentode.
3 type 6BJ6 pentodes.
6 type 6C4W triodes.
1 type 12AT7 dual triode.
3 type 12AU7 dual triodes.
1 type 26Z5W rectifier.
1 type 5651 voltage regulator.
4 type 5749 6BA6W pentodes.
1 type 6082 dual triode.

Spare fuses.

6 type 3AG 3-ampere fuses.
6 type 3AG ⅜-ampere fuses.

Spare dial lamps.

4 type GE 327 lamps.

f. Heater Spares.

1 type AG6–12 volt spare plug.
1 type XEJ–14–2 electrode.
1 electrode gasket.
1 tank gasket.
1 tank fitting.

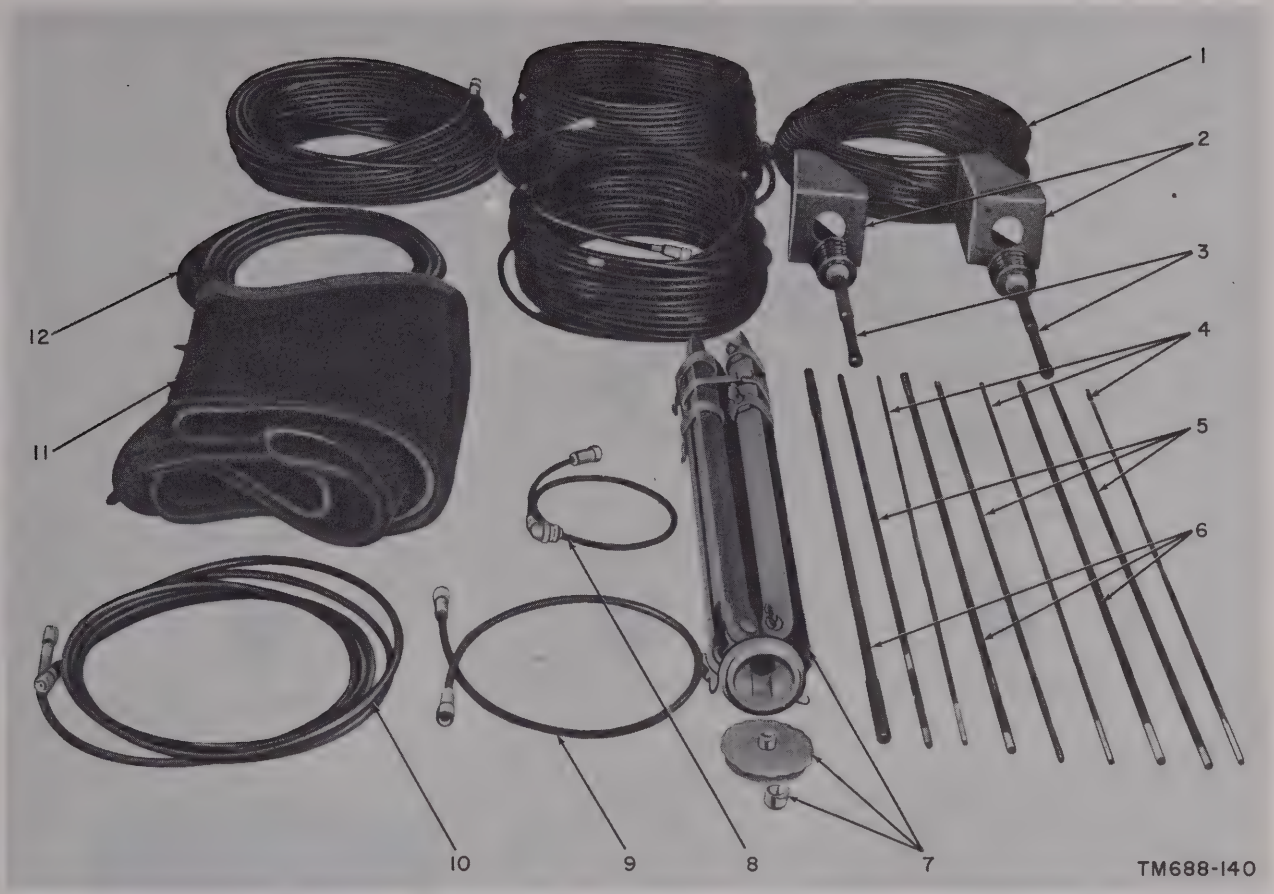

1 Cable Assembly Set CG–1097/TRD–4 (170 ft) (a set consists of two cables electrically matched)
2 Mast Base Brackets MP–50
3 Mast Bases AB–15/GR
4 Mast Sections MS–118–A
5 Mast Sections MS–117–A
6 Mast Sections MS–116–A
7 Tripod with adapter and cap
8 Electrical Power Cable Assembly C7–2378/U (3 ft)
9 Radio Frequency Cable Assembly CG–1079/U (2 ft)
10 Cable Assembly Set CG–1098/TRD–4 (9 ft) (a set consists of two cables electrically matched)
11 Shelter joining cover
12 Electrical Power Cable Assembly CX–2380/U (20 ft)

Figure 24. Contents of table storage bin, right side.

g. Shelter Spares (Stowed in Floor Cavity).
3 keys.
3 cord grip caps.
10 panel fasteners.

h. Adcock Antenna Spares.
1 Antenna Section AT–442/GR.
1 Antenna Section AT–443/GR.
1 Antenna Section AT–444/GR.
1 Antenna Section AT–445/GR.
1 Antenna Base MT–865/GR.
1 antenna coupler.
6 ground straps.
1 Antenna Loading Disk MX–1168/GR.
1 antenna mast container.
6 guy adapters.
5 Guy Stakes GP–2.
3 nylon guys.
10 locating pins.

i. Whip Antenna Spares.
1 Mast Section MS–116–A.
1 Mast Section MS–117–A.
1 Mast Section MS–118–A.

j. Spare Cables.
2 Cable Assembly Sets CG–1097/TRD–4 (170 ft).
1 Cable Assembly Set CG–1098/TRD–4 (9 ft).
1 Radio Frequency Cable Assembly CG–1079/U (2 ft).
1 Electrical Power Cable Assembly CX–2378/U (3 ft).
1 Electrical Power Cable Assembly CX–2380/U (20 ft).

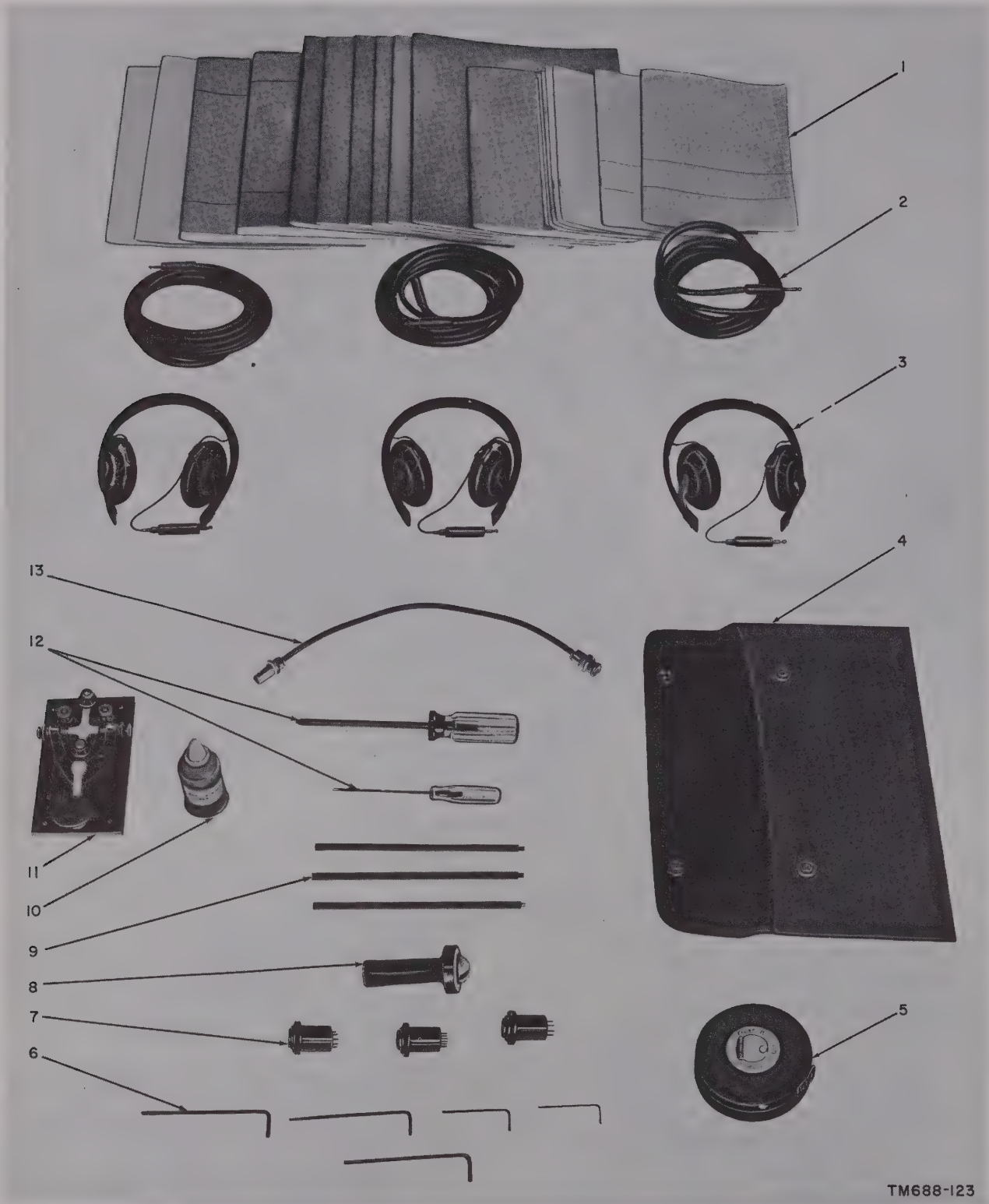

1	Literature	5	Steel tape, 50-foot	9	Alinement tools	13	Test cable, rf amplifier
2	Cords for headset	6	Allen wrenches	10	Antistatic wax		
3	Headsets	7	Tube adapters	11	Telegraph Key J-47		
4	Special tool kit bag	8	Tube extractor	12	Screwdrivers		

Figure 25. Contents of armrest and storage cabinet, middle drawer.

29. Additional Equipment Required but Not Supplied

Batteries are required for the operation of Radio Transmitter T–279/UR, but are not furnished with the equipment. The following must be requisitioned and installed (par. 42):

1 Battery BA–404/U, 1.5-volt (4½ in. high by 2⅝ in. wide by 2⅝ in. deep).

1 Battery BA–424/U, 135-volt (5⅝ in. high by 7½ in. wide by 4 in. deep).

30. Differences in Equipment

a. The GONIO DRIVE-COLD START toggle switch on the front panel of the goniometer drive has been replaced by a push-button switch on equipments delivered on Order No. 14189–PH–51 that have serial numbers greater than 146.

b. To facilitate removal of the goniometer drive motor, the four leads from the goniometer drive motor terminate in a four-lug terminal strip which has been added to the goniometer drive unit of equipments delivered on Order No. 14189–PH–51 that have serial numbers greater than 147.

CHAPTER 2

INSTALLATION

Section I. SERVICE UPON RECEIPT OF DIRECTION FINDER SET AN/TRD–4A

31. Site Selection

a. Technical Requirements for Good Site.

(1) The side area should be substantially flat for at least 150 yards from the center of the antenna system, with not more than a gentle slope for several times that distance.

(2) The area should be the highest level area in the general vicinity. A site in a sharply defined valley usually is unsatisfactory.

(3) Mountainous or hilly country should be avoided when possible.

(4) The antenna system should be as far inland as possible from the shore line of large bodies of water to avoid coastal refraction errors. If the installation must be made on or near the coast, the flattest area should be selected. Direction finding accuracy is greatest when signals from the target area cross the coast line at right angles.

(5) The earth around the antenna system should have uniformly high conductivity and moisture content. Areas uniformly covered with grass or vegetation usually meet this requirement. Rocky or sandy soil has low conductivity; however, an area with uniform low conductivity is preferable to an area of high conductivity which is spotted with rock, sand, or varying moisture content.

(6) Regions that have abrupt rises or crevices in the earth should be avoided; they usually indicate the presence of rock or mineral outcroppings, or underground streams.

(7) The site should be as far as possible from tall trees, buildings, wire fences, power or telephone lines, radio antennas, railroad tracks, sharp ground contours (mountains, cliffs, and ravines), buried conductors (cables and pipe lines), chimney stacks, water towers, rivers, lakes, streams, and main highways.

(8) Listed below are recommended distances to be maintained between the antenna system and various obstructions to minimize their effect on the accuracy of bearings.

Obstruction	Distance to be maintained
Scattered trees and single small buildings.	200 yards
Wire fences	300 yards
High cliffs and deep ravines	More than 1 mile
Buried metallic conductors (other than telephone lines to Direction Finder Set AN/TRD–4A).	300 yards.
Chimney stacks and water towers	500 yards
Overhead conductors and railroad tracks (power and telephone lines and antennas).	500 yards
Rivers, streams, and lakes	600 yards
Forests and metal structures	500 to 1,000 yards
Mountains	5 to 25 miles

b. Electrical Inspection. After the most favorable area has been selected by visual inspection, it is desirable, if possible, to make the electrical tests outlined in paragraph 95 of TM 11–476, Radio Direction Finding.

32. Site Preparation

a. Location of Antenna System. If the Adcock antenna is to be installed, clear and level off an area about 75 feet square for erection of the Adcock antenna system and counterpoise.

b. Location of Shelter. Mark off a point 140 feet northeast of the center of the antenna location; clear and level off an area near this point for the shelter.

c. Location of Generator Sets. Where commercial power is not available and generator sets are required, clear and level off an area for the installation of the generator sets at a distance of about 100 feet from the shelter location and in a direction away from the antenna system.

33. Uncrating, Unpacking, and Checking Equipment

Note. For used or reconditioned equipment, refer to *c* below.

a. Unpacking Domestic Shipments.

(1) To unload the shelter from a truck, loosen the turnbuckles of the four hold-down bars and remove the bars and extensions.

(2) Hook the loading skids over the tailgate hinge pin of the truck. Be sure the skids are parallel to each other and are attached securely. Attach the haul ropes to the two rings at the end of the shelter nearest the tailgate and the snubbing ropes to the two rings at the other end.

(3) Slowly drag the shelter off the truck onto the skids, using a winch or truck. Hold back the shelter with the snubbing ropes while it is drawn onto the skids and steady it to prevent tipping or slipping it sidewards.

(4) Slowly drag the shelter to a reasonably firm area, which is level and well-drained, 140 feet northeast of the center of the antenna location.

(5) Open the shelter doors and windows and remove the tie-down straps from the items on the floor, unfasten the chairs from the floor sockets by turning the two anchor rods.

(6) Remove the equipment in the canvas containers on the floor first and then from the bins and wall cabinet.

(7) Open the cartons that contain spare tubes and other spare parts.

(8) Check all the equipment against the packing list, or the lists in paragraphs 10, 28, and 88 to be sure all items are present. Inspect each item to see that it has not been damaged in shipment or handling. If any damage or unsatisfactory condition is noted, or if the equipment does not check with the packing list, fill out and forward DD Form 6 (Report of Damaged or Improper Shipment) as directed in paragraph 2*a*.

(9) Carry the counterpoise to the antenna site.

(10) If the Adcock antenna is to be installed, bring the following items within 50 feet of the antenna site to allow space for unfolding the counterpoise: four canvas containers containing the Adcock antennas; four antenna bases and ground straps; canvas container containing locating pins; canvas containers containing ground stakes; canvas bag containing guys; canvas bag containing chain antenna layout template and locating pins; tripod and compass adapter; leather container containing compass, ball and socket, plumb bob, and string; and hammer.

(11) Place Cable Payout Reel RL–174/G outside the shelter near the cable entrance boot.

(12) When only the crossed-loop antenna is to be erected, all the items stowed on the floor must be removed to make room for the operators. These items may be stored on the skids outside the shelter and may be covered with the canvas joining cover. The ladder will be required to install the crossed-loop antenna (par. 40).

b. Unpacking Export Shipments.

(1) Place the packing case as near the operating site as possible or on a loading platform for convenient loading onto a truck after uncrating.

(2) Pry up the waterproof roofing material and cut and fold back the tension strapping. With a nail puller,

remove the nails that secure the top sheathing to the upper edge members of the sides. Remove the top.

(3) Cut and fold back the corner straps. Remove the nails that secure the side sheathing to the corner post of the adjacent side and to the base. Remove the sides.

(4) Disengage the tie-down hooks at the bottom of the shelter and drag the shelter off the crate base, using the tow ring on either end of the shelter skids.

Note. Avoid damaging the crates more than is necessary to unpack the equipment; the packing material may be needed for re-use if the equipment is repacked for storage or shipment.

(5) Remove the outer corrugated paper shroud, the moisture-vaporproof barrier, and the inner corrugated paper shroud.

(6) Remove any corrugated padding.

(7) Open the doors and windows and remove the dehydrating agent secured within the shelter.

(8) Remove the equipment on the floor and from the bins and wall cabinet, and check the equipment against the packing list (par. 10).

(9) Unpack and check the equipment as directed in domestic shipment (*a* above).

(10) Remove the four tie-down bars tying the shelter roof section to the floor section.

(11) Assemble the whip antennas by screwing the sections together and screw the assembly into the mast base bracket (par. 41).

c. Used or Reconditioned Equipment.

(1) Follow the instructions in *a* and *b* above for uncrating, unpacking, and checking the equipment.

(2) Check the used or reconditioned equipment for tags or other indications pertaining to changes in the wiring of the equipment. If any changes in wiring have been made, note the change in this manual, preferably on the schematic diagrams.

(3) Check the operating controls for ease of rotation.

34. General Installation Instructions

a. Follow the installation instructions outlined in paragraphs 35 through 43 in the order given unless the Adcock antenna is not to be installed. If the Adcock antenna is not to be installed, follow the instructions outlined in paragraphs 37*a* and 40 through 43.

b. All cables except those listed in paragraph 39 are normally installed.

c. The antenna installation information outlined in paragraphs 35 through 41 is supplied in detail to aid in the proper installation of the antennas. The accuracy of Direction Finder Set AN/TRD–4A is definitely related to the antenna installation; therefore, be extremely careful in following the antenna installation instructions.

35. Adcock Antenna Arrangements

For optimum performance of the system when the Adcock antenna is used, the proper combination of antenna spacing, top-loading, and mast height must be used (*a* through *c* below).

a. Low-Frequency Combination. When the direction finder set is to be operated in the range of .54 to 10 mc, use a spacing between diagonally opposite monopoles of 33 feet (16 ft 6 in. from the center stake to the center of each mast) (figs. 28 and 29). Erect each mast with four sections and an antenna loading disk (fig. 5Ⓐ).

b. High-Frequency Combination. For all frequencies between 8 mc and 30 mc, use a spacing between diagonally opposite antennas of 18 feet 10 inches (9 ft 5 in. from the center stake to the center of each mast). Erect each antenna with three sections less the antenna loading disk (fig. 5Ⓑ).

c. Frequency Overlap. Both antenna combinations perform equally well between 8 and 10 mc and either can be used in this range.

36. Orientation of Adcock Antenna

a. Center Locating Pin.

(1) Drive a locating pin (7, fig. 23) into the center of the area that was cleared from the antenna site (par. 32*a*). Leave about 2 inches of the pin above the ground.

(2) Using a plumb line, erect the tripod so that the center of the tripod is

directly over the center of the center locating pin (fig. 26).

(3) Carefully remove the compass (3, fig. 22) and the ball and socket unit (4, fig. 22) from the carrying case.

(4) Remove the small screw cap at the top of the adapter on the tripod (7, fig. 24).

(5) Using the ball and socket unit (fig. 27), install the compass on the tripod.

(6) Loosen the leveling locking nut and level the compass by adjusting the ball and socket unit until the air bubble in the spirit level of the compass appears in the center of the liquid. Tighten the leveling locking nut.

b. Compass Adjustment. The antenna system should be oriented to either true or magnetic north as directed by the using organization. Except for the compass adjustments described in (1) and (2) below, the orientation procedures are identical.

(1) *Magnetic north.*

(*a*) *Scale adjustment.* With a screwdriver, turn the declination screw (fig. 27) on the rim of the compass to rotate the compass scale so that the 0–360° mark coincides with the index.

(*b*) *Reading compass.* Release the compass needle by turning the thumb screw (caging screw) (fig. 27) on the bottom plate of the compass. Loosen the compass locking screw (fig. 27) and when the compass needle stops swinging, rotate the compass until the north end of the needle and the 360° mark on the compass dial coincide. The viewing sights then point to magnetic north. Tighten the compass locking screw and the caging screw.

(2) *True north.*

(*a*) *Scale adjustment.* By referring to a suitable map, determine the magnetic declination for the locality in which Direction Finder Set AN/TRD–4A is to be installed. With a screwdriver, turn the declination screw on the rim of the compass to rotate the scale so that the 0–360° mark moves away from the index the number of degrees and in the direction which will compensate for the magnetic declination.

Note.—Magnetic declination is defined as the angle between true north and the direction indicated by a magnetic compass. This angle varies for different locations on the earth. It is necessary, therefore, to use charts or maps that show declination and the annual change in declination. West declination signifies that magnetic north is west of true north; east declination signifies that magnetic north is east of true north.

1. To compensate for a magnetic declination of 12° west, rotate the compass scale by turning the declination screw so that the index points to the 348° mark (360°–12°).

2. If the declination is 12° east, rotate the compass scale so that the index points to the 12° mark.

(*b*) *Reading compass.* Loosen the caging screw to release the compass needle. Loosen the compass locking screw and rotate the compass until the north end of the needle and the 0–360° mark on the compass coincide. The viewing sights then point to true north.

c. Locating Pin Alinement (fig. 28). With the compass sights adjusted to point to either true or magnetic north, drive a locating pin into the ground in line with the sights at exactly 9 feet 5 inches from the center locating pin for high-frequency (8–30 mc) antenna configuration or 16 feet 6 inches from the center locating pin for low-frequency (.54–10 mc) antenna configuration (step 1, fig. 28). The exact distance can be laid out by using the antenna layout template made of chain (fig. 29). Run the chain through your hand and allow it to untwist before measuring the locating pin position. The chain must be pulled tight for accurate measurements. The 50-foot steel tape can also be used to measure the distance. Rotate the compass sights exactly 90°, 180°, 270°; repeat the positioning operation at each point (steps 2, 3, and 4, fig. 28). Recheck the compass level, the compass orientation, and the locating pin alinement when viewed through the compass sights. If the alinement is correct, set aside the compass, tripod, and other accessories.

Figure 26. Use of compass sights to locate north locating pin.

Drive the locating pins into the ground until 1 inch of each pin is visible above ground.

Note.—If the terrain is such that it is impossible to erect the monopoles directly north, south, east, and west of the center locating pin, the locating pins may be shifted a maximum of 20°. If the monopoles are not oriented exactly to north, note the misorientation and correct for it when the propeller-shaped pattern is alined in paragraph 49.

37. Installation of Main Power and Adcock Antenna Cables

Turn the cable payout reel to face the generator sets that should be located 100 feet from the shelter in a direction away from the antenna.

a. Unreel Electrical Power Cable Assembly CX–2380/U (125 ft), which is used to connect the OUTPUT terminal on Switch Box SA–345/U to the terminal box in the shelter. The switch box may be mounted on a post, a trailer associated with one power unit, or any convenient object which will keep it off the ground (fig. 30). Connect the three Electrical Power Cable Assemblies CX–2380/U (20 ft) (1, fig. 23) between the mobile power units and the appropriate terminals on the INPUT terminal strip of the switch box. Connect one cable from generator No. 1 to the two terminals marked

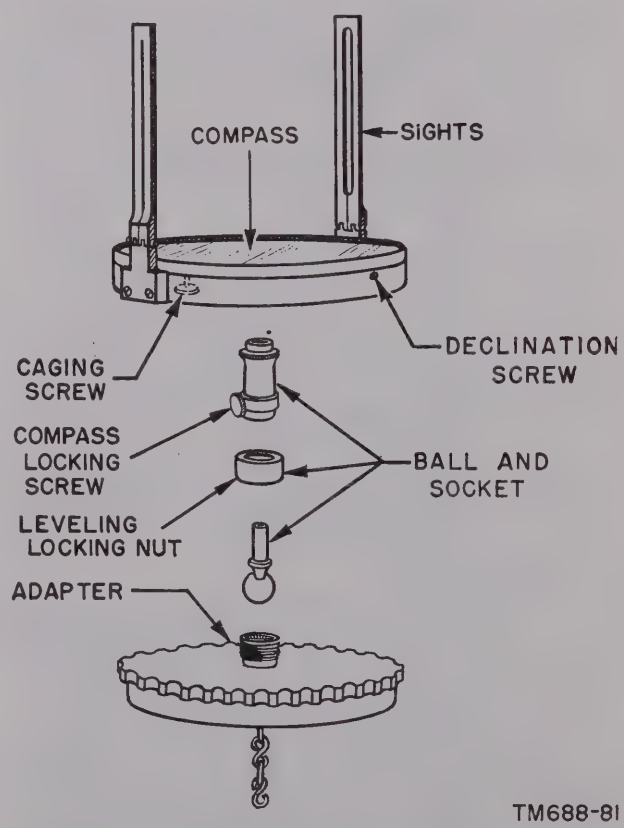

Figure 27. Compass, ball and socket, and adapter.

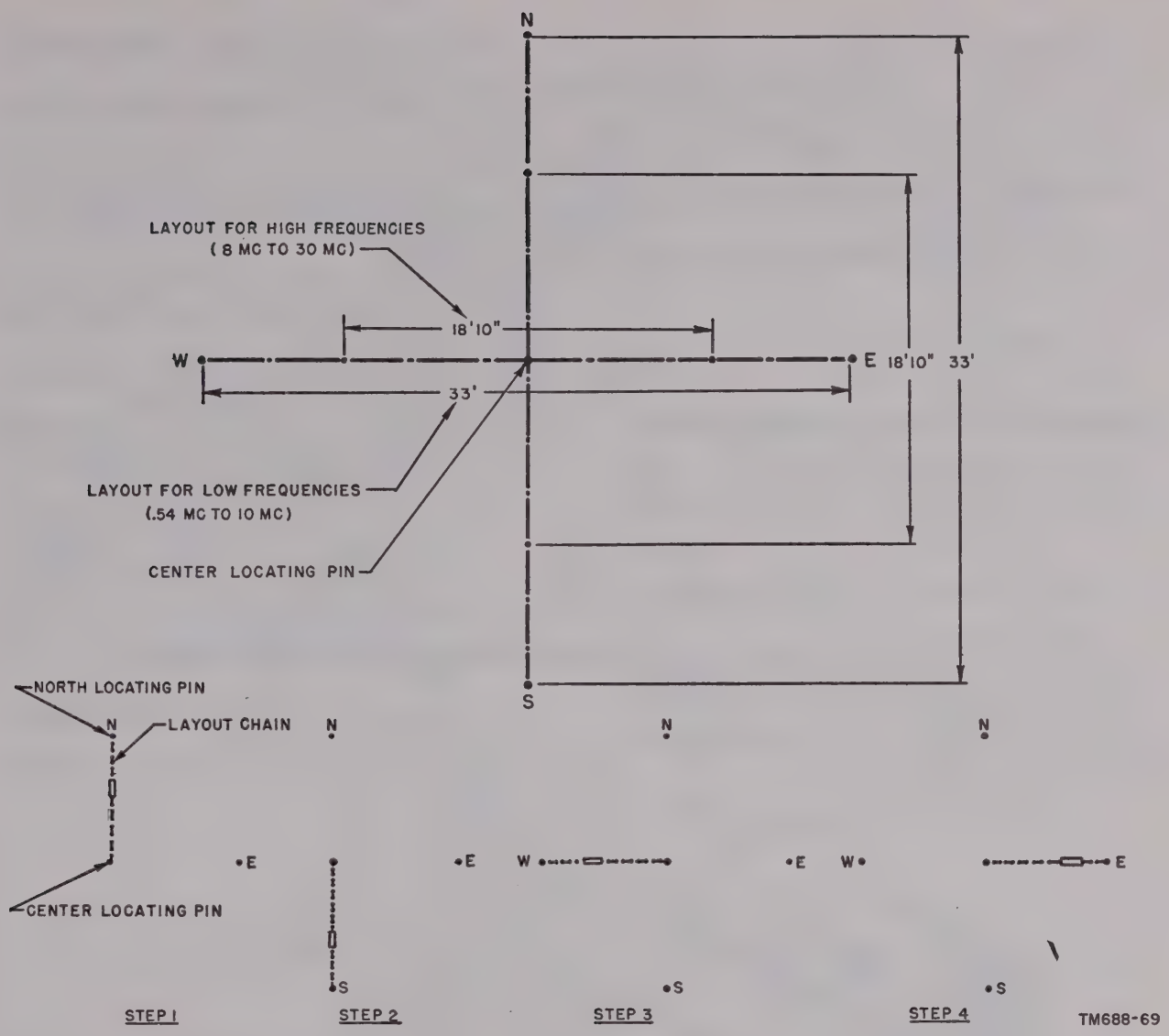

Figure 28. Adcock antenna layout.

GEN–1, one cable from generator No. 2 to the two terminals marked GEN–2, and the third cable from generator No. 3 or a commercial power source to the two terminals marked GEN–3.

b. It is preferable to lay the four antenna cables under the counterpoise for the maximum possible distance. Unreel the four antenna cables, pulling them toward the center of the antenna location. When the antenna cables have been completely unreeled, arrange the four cables so that they radiate from the center of the array toward the four mast locations. The ends of the cables are color-coded as follows to assure proper location:

Antenna	Cable Assembly Sets CG–1097/TRD–4 (170 ft.)
North	W103 (green)
South	W104 (yellow)
East	W102 (blue)
West	W101 (brown)

Two Cable Assembly Sets CG–1097/TRD–4 (170 ft) are required. Each set consists of two balanced electrical cables. One set consists of W103 and W104 and the other consists of W101 and W102.

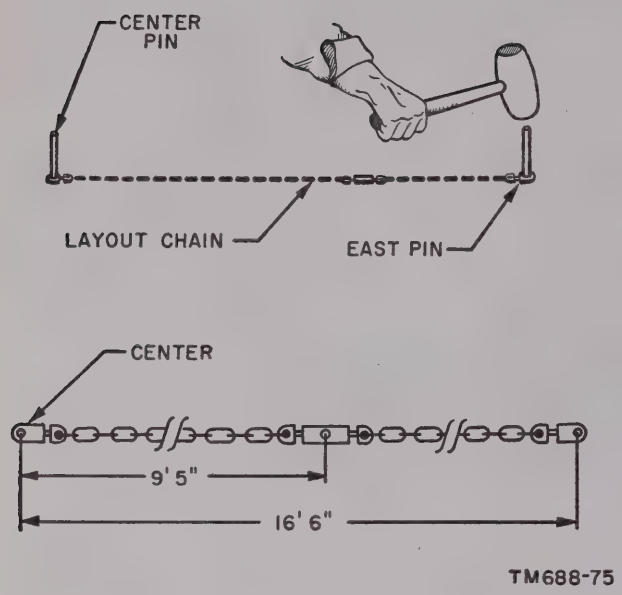

Figure 29. Adcock antenna layout template.

c. The electrical balance of the antenna cables is very critical in direction finding equipment. This balance can easily be upset by rough treatment of the cables and the resulting unbalance will introduce bearing errors.

(1) Be careful not to run over the cables with trucks, etc.
(2) Be careful not to kink, stretch, or step on the cables.
(3) Single cables of one set should not be interchanged with cables of another set unless they can be matched electrically.
(4) Keep the cables protected, preferably on the cable payout reel, when not in use.
(5) Keep the connectors clean. Avoid getting dirt in the connectors.
(6) Inspect the cables in use frequently. Look for loose pins in the connectors, as well as for external damage.
(7) Remove any stones or sharp objects from under the cables where they might damage the cable if the cable is accidentally stepped on.

38. Installation of Counterpoise (fig. 8)

Note. Be careful not to step on or move the locating pins when laying the counterpoise.

a. Open the counterpoise container, remove

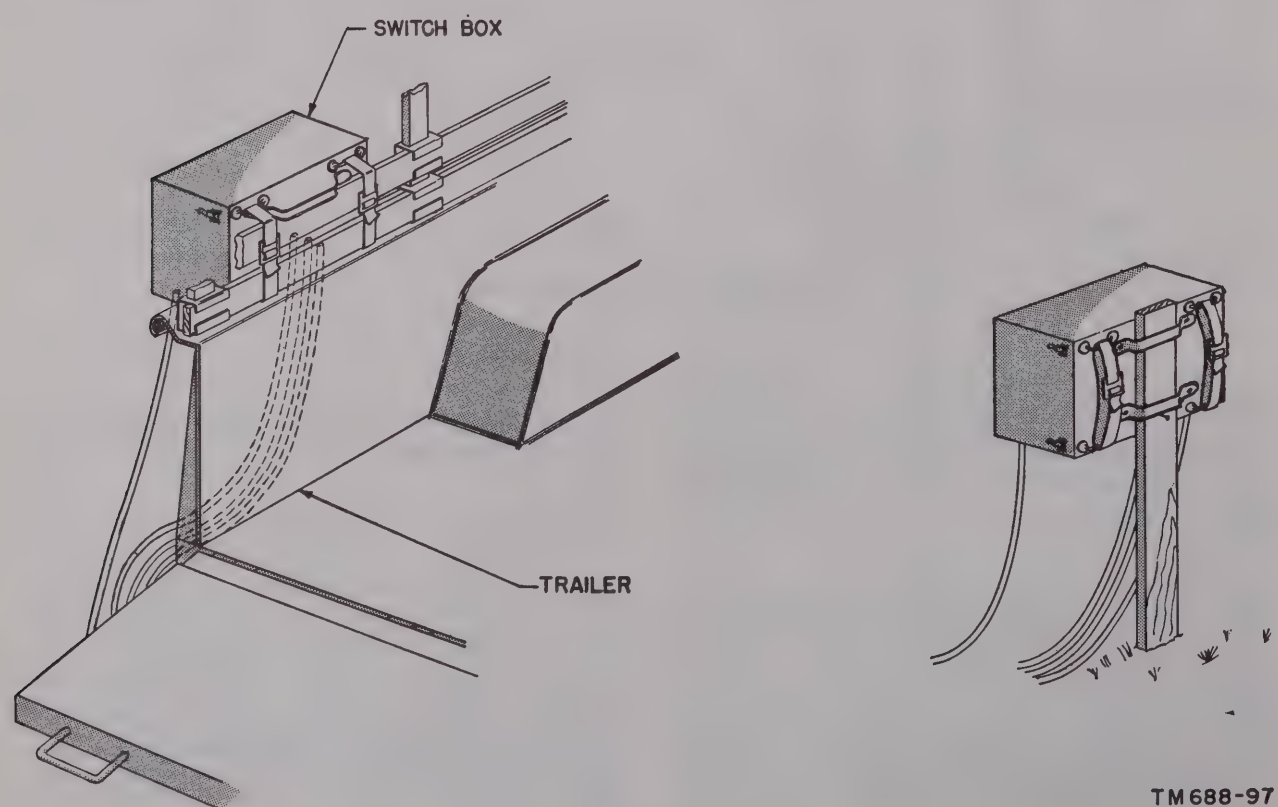

Figure 30. Installing switch box.

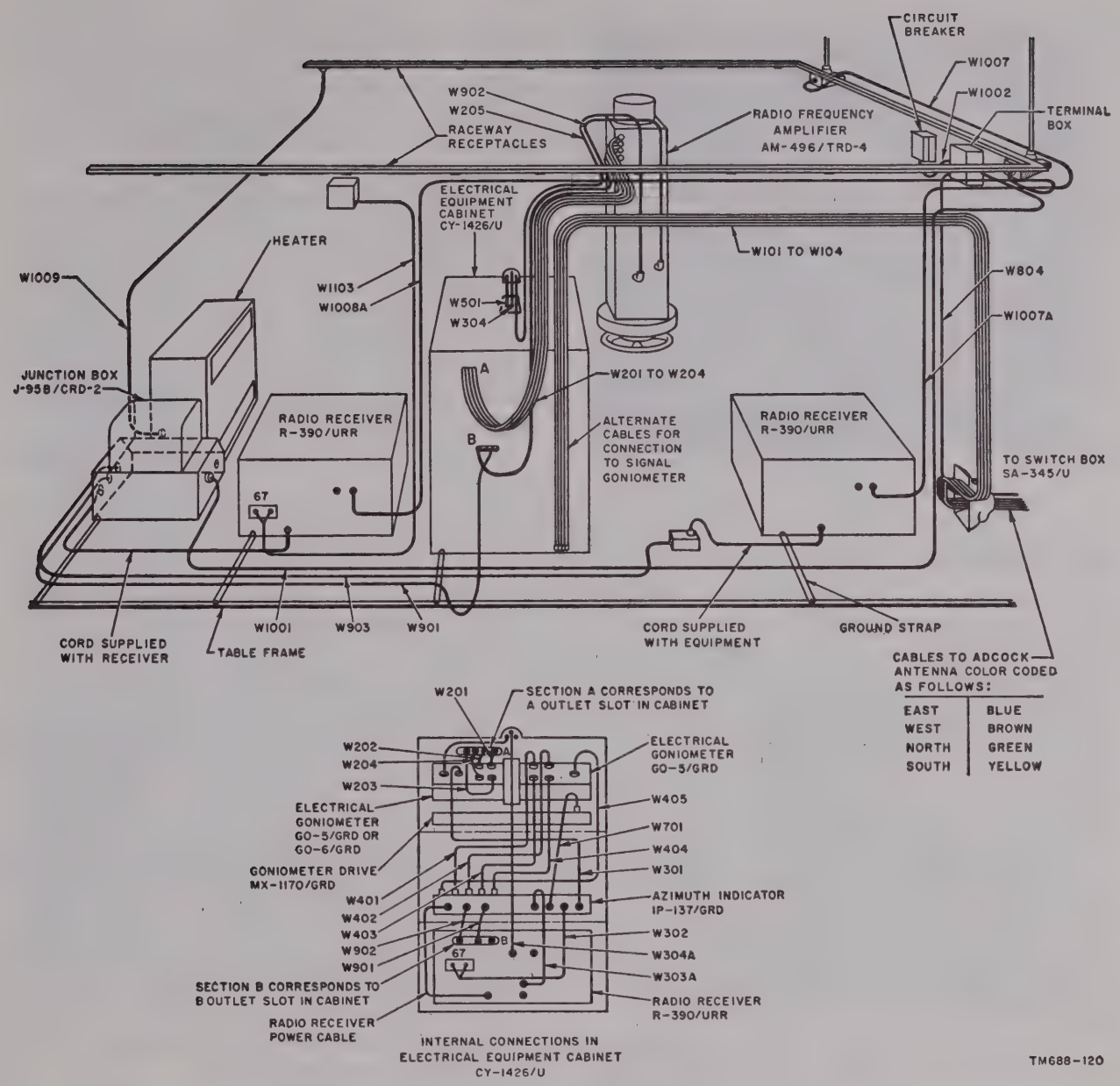

Figure 31. Direction Finder Set AN/TRD-4A, cable diagram.

the counterpoise container, remove the counterpoise, and place it at the center of the antenna site.

b. Turn the counterpoise so that one end will unroll toward the south and the other end toward the north as indicated by the locating pins (par. 36*c*).

c. Unroll the ends as far as possible to form a mat of wire 75 feet long and about 8 feet wide.

d. The mat will unfold four times toward the east and four times toward the west if it has been folded properly when moved from its previous site. The unfolding is accomplished most easily by having a man at each end lift four of the wooden end pieces and unfold the counterpoise away from the center. This procedure is continued until the entire counterpoise has been laid out flat.

e. Adjust the counterpoise so that its center is approximately over the center marker pin. The counterpoise center is marked with a crossed braid for ease of location.

f. Use two counterpoise clamps to hold each wooden end piece in place after the counterpoise has been straightened out (fig. 32).

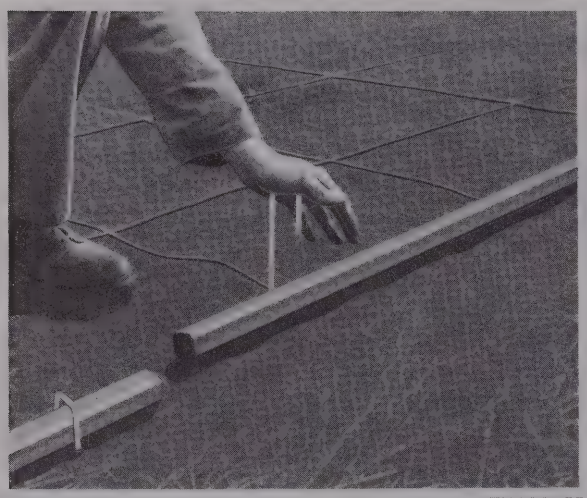

Figure 32. Installing counterpoise clamps.

39. Erection of Adcock Antenna

a. Antenna AS–533/GR (Adcock monopole) consists of the parts illustrated in figure 6.

b. By sighting through the small hole in the center of Antenna Base MT–865/GR, set an antenna base over each antenna locating pin (par. 36*c*). Remove the upper and lower retaining pins (fig. 6) from the holes in each of the four mast sockets. Turn the leveling screws (fig. 6) on each mast socket as far out as possible.

Note.—Be careful not to move the locating pins out of alignment.

c. Face the slot in each mast socket away from the center of the array so that the masts will lay on the ground on a line through the diagonally opposite corners of the array.

d. Anchor the bases to the ground by driving four guy stakes (2, fig. 23) through the four corner holes of each base. Use the hammer (3, fig. 23) supplied with the direction finder set to drive the guy stakes into the ground.

e. Remove the antenna coupler (13, fig. 6) unit from the lower antenna section of one of the four masts to prevent damage.

f. Insert the ball end of the lower Antenna Section AT–442/GR into a mast socket and install the lower retaining pin (fig. 6) that captivates the ball in the mast socket.

g. Join the remaining antenna sections (fig. 33). Use Antenna Sections AT–442/GR, AT–443/GR and AT–444/GR for high-frequency operation; add Antenna Section AT–445/GR for low-frequency operation.

Caution: Avoid getting dirt in the mast joints.

h. If low-frequency operation is contemplated, open an antenna loading disk (5, fig. 6) until the angles between the radial spokes are equal. Screw the antenna loading disk to the upper antenna section (fig. 34).

Notes:

1. To prevent damage, do not drag the antenna mast with the antenna loading disk attached.
2. In areas where prevailing winds are of high velocity, the antenna loading disk may be left off the mast to give a more stable structure without critical loss in sensitivity.

i. Hook three guys on the mast guy plate located on the third mast section from the bottom of the mast (Antenna Section AT–444/GR).

j. Pace off a distance of approximately 17 feet from one of the mast sockets on a line through the diagonal corners of the array, and drive a guy stake with a guy adapter (9, fig. 23) attached into the ground.

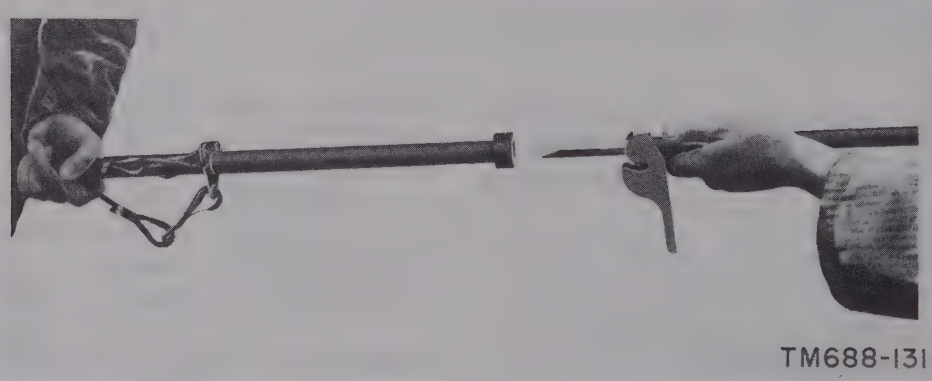

Figure 33. Joining antenna sections.

Figure 34. Installing loading disk.

k. Erect the mast by lifting the mast near the center and by raising it with the arms over the head and walking toward the base (fig. 35).

l. Insert the upper retaining pin (fig. 6) into the mast base upper hole.

m. Twist the mast until the coupler mounting screws face toward the center of the antenna array.

n. Hook the guys to the guy adapter on the guy stake and to the guy adapters at the center of the adjacent mast bases.

o. Adjust the clamps on the guys until the mast appears vertical. The guy clamp tightens as the guy is pulled through the clamp and loosens when the flared end of the plunger is pulled out.

Caution: Do not tighten the guys excessively or the mast may be bent permanently.

p. Using the rod level as a reference (fig. 36), adjust the base leveling screws until the bubble in the level is centered. Readjust the guys, if necessary to make the mast straight. Lock the leveling screws.

q. Install an antenna coupler on the lower mast section using the thumb screws provided. Connect the ground strap to the lower end of

the antenna coupler to the mast base and counterpoise as shown in figure 37.

Note.—It is very important for proper operation that the antenna coupler and group strap connections be clean and tight. Scrape the counterpoise wire at the ground strap contact point before attaching the ground strap.

r. Connect the antenna cable to the antenna couplers (par. 37*b*).

s. Erect the other three masts in the manner outlined in *e* through *r* above.

t. Set the tripod and compass over the center locating pin. Check the tripod position accurately with the plumb bob (fig. 26).

40. Erection of Crossed-Loop Antenna (fig. 38)

a. Using the ladder provided in the shelter (21, fig. 19), carry the folder crossed-loop antenna up to the shelter roof.

b. Remove the protective cover from the antenna mount.

c. Insert the center rod of the antenna into the center socket of the mast base.

d. Loosen the wingnut on the storage clamp and separate the parts of the storage clamp to allow the antenna legs to become free.

Figure 35. Raising mast.

u. Recheck each mast position by viewing it through the compass sights. If any mast is off by more than 1°, lower the mast and relocate the mast base.

v. To lower the mast, remove the antenna coupler and ground strap so that they will not be damaged. Back the leveling screws all the way out. Disconnect the guys at the stake and base, remove the upper base retaining pin and lower the mast gently by holding it with the hands over the head and walking away from the base. Gently rest the antenna loading disk on the ground to prevent damage and disassemble the antenna loading disk and the mast sections.

e. Loosen the wingnuts at the outer most corners and the top of each loop. Unfold each leg and insert each leg into its respective socket in the antenna base and screw the wing nut on to the threaded portion of the socket.

Note.—It is important that the loop attached to the lower fittings at the top crossover point be located in the sockets marked N and S. The loop attached to the upper fitting may then be readily removed for rotatable single-loop operation (par. 46*a*).

f. Tighten the wing nuts at the outermost corners and at the top of each loop.

g. Orient the crossed-loop antenna to true north if visual operation using the crossed-loop antenna is anticipated (par. 46).

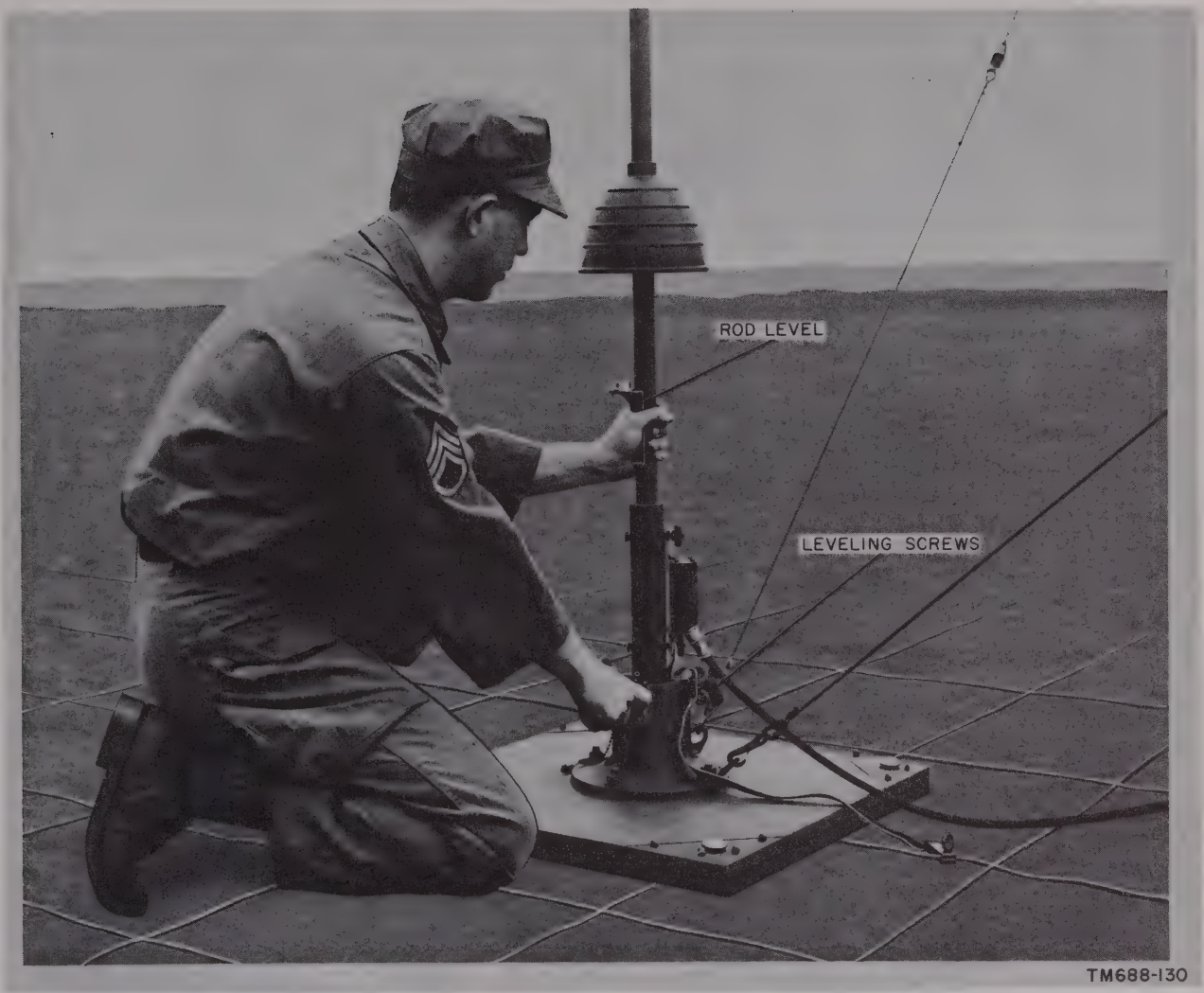

Figure 36. Leveling lower antenna section.

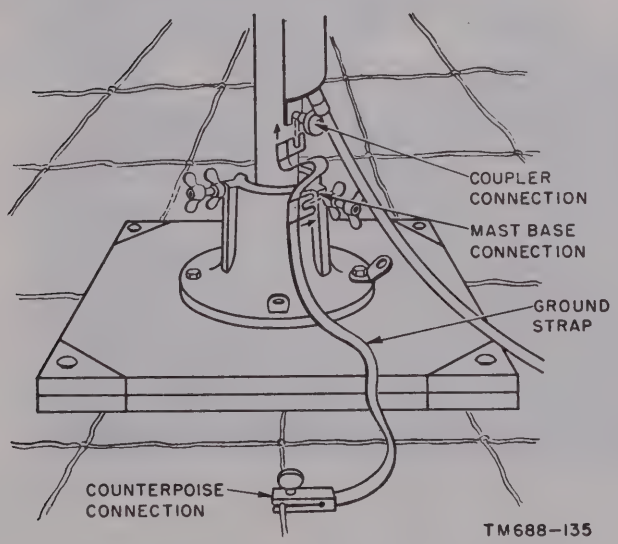

Figure 37. Connection of ground strap to lower end of antenna coupler, mast base, and counterpoise.

41. Whip Antenna Installation
(fig. 39)

Note.—Normally the mast base bracket and the mast base are removed only for shipment. Disregard *a* and *b* below if the mast base bracket and the mast base have been previously installed.

a. Remove the mast base bracket mounting bolts from the side of the roof section at the door end of the shelter.

b. Hold the mast base bracket in position and install the four mounting plate bolts and lockwashers.

c. Assemble the mast by screwing the sections together and placing the top mast base section on the top side of the hole in the mast base bracket and the bottom section of the mast base on the bottom side of the hole in the mast base bracket. Using a wrench, screw the

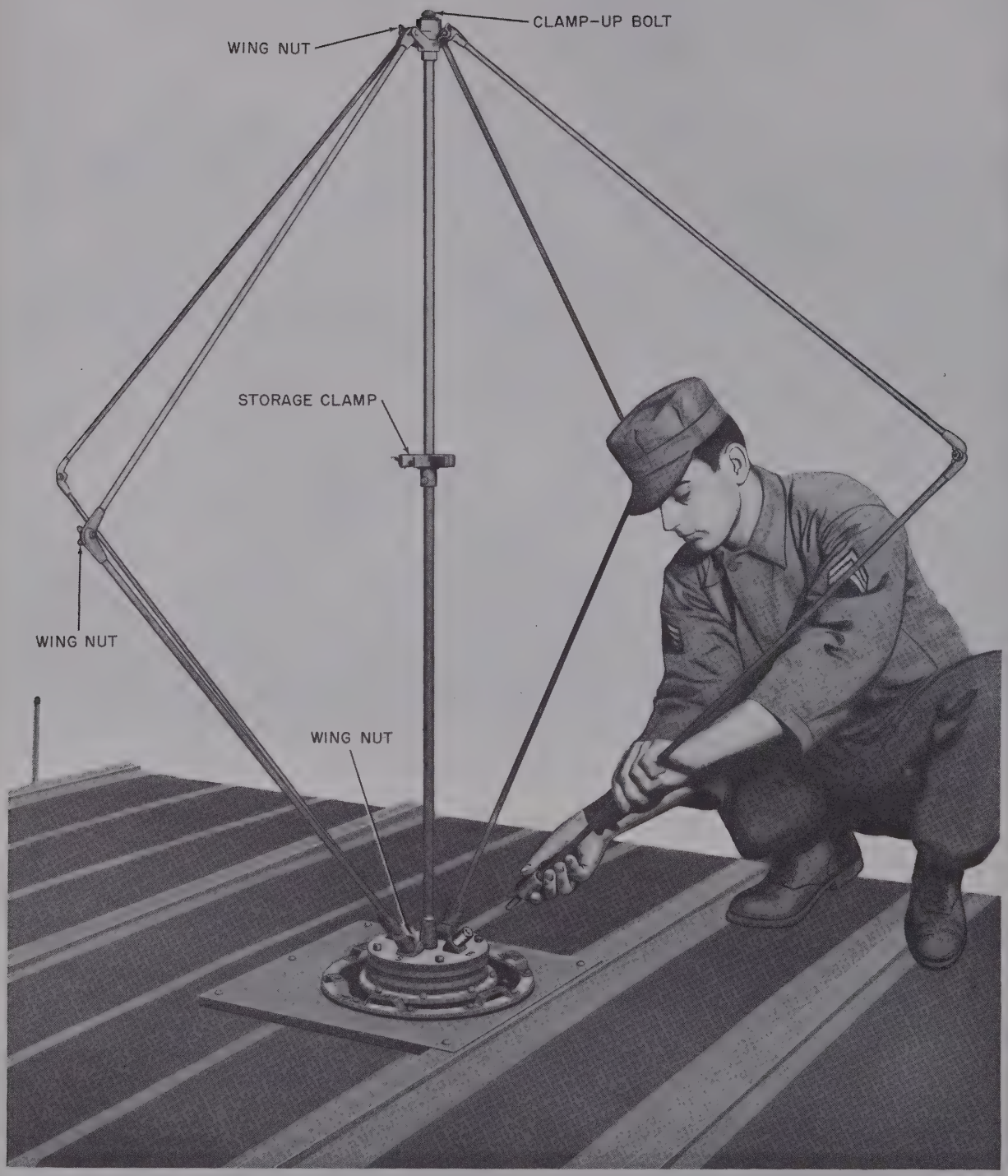

Figure 38. Installing Antenna AT-297/TRD-4 (crossed loop).

two sections together. Connect the plug attached to the whip antenna cable W1007A or W1008A to the receptacle on the mast base.

d. Attach the grounding clamp to the plug and tighten the wing nut.

e. Repeat this operation for the second whip antenna.

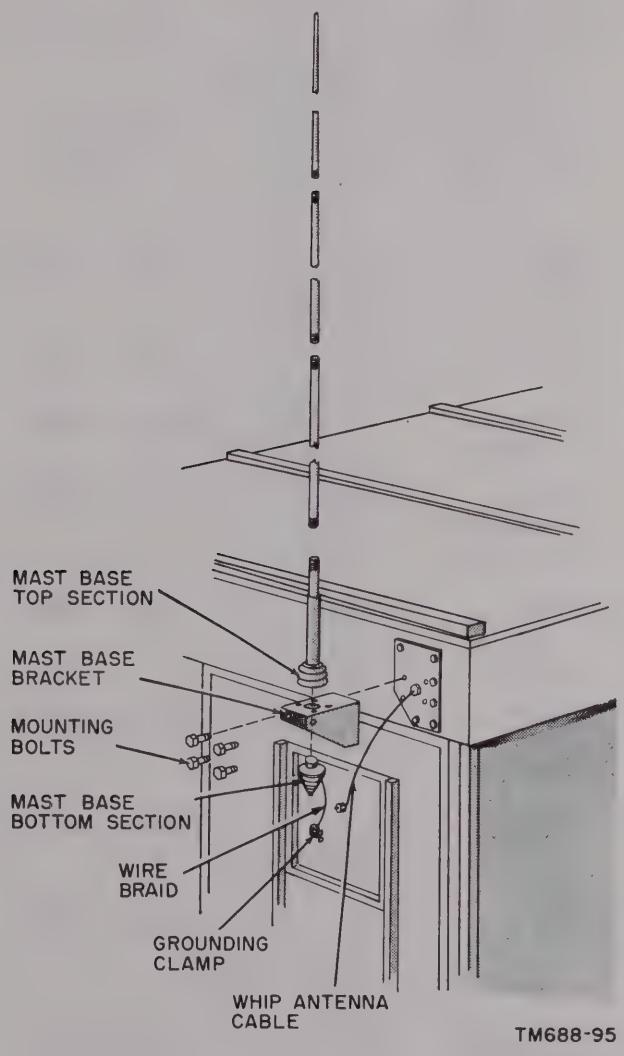

Figure 39. Installing whip antenna.

42. Installation of Batteries in Radio Transmitter T–279/UR

a. Since the radio transmitter is shipped without batteries, one 1.5-volt Battery BA–404/U and one 135-volt Battery BA–424/U must be requisitioned and installed as follows:

(1) Set the TRANSMITTER switch in the OFF position.

(2) Turn the radio transmitter on its side and unscrew the four knurled hold-down screws (fig. 18) on the bottom of the case.

(3) Pull the chassis assembly out of the case.

(4) Loosen the four lower plate hold-down screws (fig. 117) and lift off the lower plate.

(5) Set the 135-volt Battery BA–424/U in place (fig. 116) with its socket adjacent to plug P602.

(6) Connect plug P602, and replace the lower plate, locating the antenna guide block (fig. 117) under the antenna. Tighten the four lower plate hold-down screws.

(7) Turn the radio transmitter right side up.

(8) On the left side of Battery BA–404/U (fig. 116) is a hinged plate called a battery clamp. Unscrew the knurled battery clamp hold-down screw and open the battery clamp.

(9) Slide the 1.5-volt Battery BA–404/U in place (fig. 116) with the socket that faces the hole in the end bracket. Connect plug P601 and close the battery clamp. Tighten the knurled battery clamp hold-down screw.

(10) Return the chassis into its case and tighten the four knurled hold-down screws on the bottom of the case.

b. Set the TRANSMITTER switch in the ON position and check the operation of the radio transmitter (par. 81).

43. Cable Check
(figs. 31 and 138)

Cable	Nomenclature	Req. No.	Length	Connects		Remarks
				From—	To—	
W101 (brown)	See paragraph 26*d*.	See paragraph 26*d*.	170′	West monopole of Adcock antenna.	J401 or J501 on signal goniometer.*	On cable payout reel.
W102 (blue)	See paragraph 26*d*.	See paragraph 26*d*.	170′	East monopole of Adcock antenna.	J402 or J502 on signal goniometer.*	On cable payout reel.
W103 (green)	See paragraph 26*d*.	See paragraph 26*d*.	170′	North monopole of Adcock antenna.	J403 or J503 on signal goniometer.	On cable payout reel.
W104 (yellow)	See paragraph 26*d*.	See paragraph 26*d*.	170′	South monopole of Adcock antenna.	J404 or J504 on signal goniometer.*	On cable payout reel.
W201 (green)	See paragraph 26*e*.	See paragraph 26*e*.	9′	J201 on rf amplifier.	J403 or J503 on signal goniometer.*	Normally installed.
W202 (yellow)	See paragraph 26*e*.	See paragraph 26*e*.	9′	J202 on rf amplifier.	J404 or J504 on signal goniometer.*	Normally installed.
W203 (blue)	See paragraph 26*e*.	See paragraph 26*e*.	9′	J203 on rf amplifier.	J402 or J502 on signal goniometer.*	Normally installed.
W204 (brown)	See paragraph 26*e*.	See paragraph 26*e*.	9′	J204 on rf amplifier.	J401 or J501 on signal goniometer.*	Normally installed.
W401	Radio Frequency Cable Assembly CG–1078/U (2 ft. 6 in.).	1	2′ 6″	J401 on indicator goniometer.	J307 on azimuth indicator.	Normally installed.
W402	Radio Frequency Cable Assembly CG–1078/U (2 ft. 6 in.).	1	2′ 6″	J402 on indicator goniometer.	J308 on azimuth indicator.	Normally installed.
W403	Radio Frequency Cable Assembly CG–1078/U (2 ft. 6 in.).	1	2′ 6″	J403 on indicator goniometer.	J309 on azimuth indicator.	Normally installed.
W404	Radio Frequency Cable Assembly CG–1078/U (2 ft. 6 in.).	1	2′ 6″	J404 on indicator goniometer.	J310 on azimuth indicator.	Normally installed.
W405	Radio Frequency Cable Assembly CG–1079/U (2 ft. 10 in.)	1	2′ 10″	J405 on indicator goniometer.	J311 on azimuth indicator.	Normally installed.
W501	Radio Frequency Cable Assembly CG–1079/U (2 ft.).	1 & 1 spare	2′	J405 or J505 on signal goniometer.*	J1102 on rf switch.	Normally installed.
W205	Radio Frequency Cable Assembly CG–1079/U (8 ft. 6 in.).	1	8′ 6″	J205 on rf amplifier.	J1103 on rf switch.	Normally installed.
W304A	Radio Frequency Cable Assembly CG–1079/U (3 ft. 5 in.).	1	3′ 5″	J1101 on rf switch.	J108 on df receiver.	Normally installed.

Cable	Nomenclature	Req. No.	Length	Connects		Remarks
				From—	To—	
W303A	Cord CG–409E/U (2 ft. 3 in.).	1	2′ 3″	J106 on df receiver.	J302 on azimuth.	Normally installed.
W302	Electrical Power Cable Assembly CX–2377/U (2 ft. 3 in.).	1	2′ 3″	LOCAL AUDIO terminals 6 and 7 on df receiver.	P301 on azimuth.	Normally installed.
W301	Electrical Power Cable Assembly CX–2378/U (3 ft.)	1 & 1 spare	3′	J303 on azimuth indicator.	P401 or P501 signal goniometer.*	Normally installed.
W701	Electrical Power Cable Assembly CX–2379/U (2 ft. 6 in.).	1	2′ 6″	J304 on azimuth indicator.	P701 on goniometer drive.	Normally installed.
W801–W803	Electrical Power Cable Assembly CX–2380/U (20 ft.)	3 & 1 spare	20′	A. C. OUTPUT and NEUTRAL terminals on power units.	INPUT terminal board on switch box.	Stowed in shelter.
W804	Electrical Power Cable Assembly CX–2380/U (125 ft.).	1	125′	OUTPUT terminal board on switch box.	Terminal box.	On cable payout reel.
W901	Electrical Power Cable Assembly CX–2381/U (8 ft.)	1	8′	J904 on junction box.	P302 on azimuth indicator.	Normally installed.
W902	Electrical Power Cable Assembly CX–2381/U (10 ft.)	1	10′	J305 on azimuth indicator.	P201 on rf amplifier.	Normally installed.
W903	Electrical Power Cable Assembly CX–2382/U (10 ft.).	1	10′	J901 on junction box.	Convenience outlet.	Normally installed.
W1001	Electrical Power Cable Assembly CX–2383/U (16 ft.)	1	16′	Terminal box.	P902 on junction box.	Normally installed.
W1002	Electrical Power Cable Assembly CX–2383/U (3 ft. 4 in.).	1	3′ 4″	Terminal box.	Circuit breaker.	Normally installed.
W1003	Electrical Power Cable Assembly CX–2384/U (9 ft.)	1	9′	LOCAL AUDIO terminals 6 and 7 on communication receiver.	Loudspeaker.	Normally installed.
W1007A and W1008A	Radio Frequency Cable Assembly CG–1379/U (14 ft. 6 in.)	2	14′ 6″	Whip antenna.	J108 on communication and intercept receivers.	Normally installed.

*The jack reference symbols in the 400 series apply when the low-frequency signal goniometer (Electrical Goniometer GO–5/GRD) is used, and the jack reference symbols in the 500 series apply when the high-frequency signal goniometer (Electrical Goniometer GO–6/GRD) is used.

Section II. INITIAL ADJUSTMENT OF EQUIPMENT

44. General

The initial adjustments in *a* and *b* must be made after the equipment has been installed. The method of making the adjustment depends on the installation and mode of operation.

a. Visual Operation. Either the Adcock or crossed-loop antenna may be used during visual operation. The advantages and limitations of each are listed in paragraph 62.

(1) If the Adcock antenna is to be used, the position of the propeller-shaped pattern must be adjusted so that it corresponds to the physical orientation of the Adcock antenna (par. 49).

(2) If the crossed-loop antenna is to be used, the position of the propeller-shaped pattern must be adjusted so that it corresponds to the physical orientation of the crossed-loop antenna (par. 48).

(3) If it is desirable to change from Adcock to crossed-loop operation or vice versa and the Adcock antenna has been oriented to north, no realinement is required. However, if the Adcock antenna has not been alined to north (par. 36*c*) realinement of the propeller-shaped pattern is required when changing from Adcock to crossed-loop operation or vice versa (pars. 48 and 49).

(4) After the propeller-shaped pattern has been aligned, visual bearings are checked by comparing sight bearings on the radio transmitter with the visual bearings obtained (par. 51).

b. Aural-Null Operation. The Adcock, crossed-loop, or single-loop antenna can be used during aural-null operation. The advantages and limitations of each are listed in paragraph 62.

(1) The Adcock and crossed-loop antennas use the same indicating scale (the bearing indicator scale on the goniometer drive) and the scale must be adjusted with the antenna which is to be used. The adjustment using the Adcock antenna is covered in paragraph 50*c* and the adjustment using the crossed-loop antenna is covered in paragraph 50*b*.

(2) The single-loop antenna uses the azimuth scale on the rf amplifier and this scale is always adjusted with the single-loop antenna (par. 47).

(3) If the Adcock antenna has been oriented to north, no realinement is required to change antennas. If the Adcock has not been alined to north, it is necessary to realine the propeller-shaped pattern and the bearing indicator scale when changing from Adcock to crossed-loop operation or vice versa (pars. 50*b* and 50*c*). No realinement is required at any time to change from either Adcock or crossed-loop to single-loop operation or vice versa.

45. Initial Adjustment of Goniometers

a. Loosen the four captive screws at the corners of the goniometer drive front panel and pull the goniometer drive as far forward as possible.

b. Refer to figure 43 and check to see that the proper goniometers are installed in the goniometer drive.

Goniometer	Nomenclature	When used
Signal	Electrical Goniometer GO–5/GRD	Between .5 and 10 mc
Signal	Electrical Goniometer GO–6/GRD	Between 8 and 30 mc
Signal	Electrical Goniometer GO–5/GRD or Electrical Goniometer GO–6/GRD	Between 8 and 10 mc
Indicator	Electrical Goniometer GO–5/GRD	At all frequencies

c. If the wrong goniometer is installed in the goniometer drive, proceed as follows to replace it with the correct one:

(1) Disconnect the cabling to the goniometer.

(2) Loosen the two goniometer locking nuts that hold the goniometer housing to the goniometer drive housing (fig. 70).

(3) Spread the goniometer locking nuts and pull the goniometer housing toward the side of the goniometer drive until the goniometer rotor is clear of the coupling.

(4) Remove the goniometer and reverse the removal procedure ((1)–(3) above) to replace it with the correct one.

(5) To insure that the plunger on the goniometer rotor mates with the slot in the drive disk (fig. 70), insert the eraser end of a pencil through a countersunk hole in the end of the goniometer housing. Open the door on the front panel of the goniometer drive and rotate the bearing indicator scale while pressing the pencil in the countersunk hole until a click is heard.

(6) Push the goniometer drive back into the cabinet and tighten the four captive screws on the front panel of the goniometer drive.

46. Orientation of Single-Loop Antenna

a. On top of the shelter, remove the single-loop antenna attached to the top link. This is accomplished by taking out the clamp-up bolt (fig. 38) and loosening the two clamp-up bushings. Loosen the wingnuts at the E and W connectors on the antenna base and pull the east and west legs out of their respective sockets. The link may then be pulled straight up and off the center mast (sense monopole).

b. Place the compass, mounted on the tripod, approximately 100 feet to the south of the shelter. The compass should be far enough away from metallic objects to prevent errors in the compass reading.

Note. Using the compass on top of the shelter will result in large bearing errors caused by the magnetic effect of the iron in the shelter.

c. Sight on the sense monopole through the compass sights and note the bearing on the compass. If it is desired to orient to true north, correct this bearing for declination (par. 36).

d. Rotate the loop until the two halves of the loop are exactly in line with the sense monopole when viewed through the compass sights. Make certain that the south half of the loop is between the sense monopole and the compass.

47. Alinement of Rf Amplifier Azimuth Scale

a. After orientation (par. 46), the loop is set for a bearing of 90°, plus or minus a correction equal to the number of degrees between the north end of the compass needle and the compass scale 0–360° mark. The correction should be applied as follows:

(1) If the compass needle points to a reading to the right of the 0–360° mark, subtract the number of degrees between the needle and the 0–360° mark from 90°.

Example: If the needle comes to rest 4.5° to the right of the scale 360° mark, subtract 4.5 from 90 to give a loop bearing of 85.5°.

(2) If the compass needle points to a reading to the left of the scale 0–360° mark, add the number of degrees between the needle and the 0–360° mark to 90°.

Example: If the needle comes to rest 10° to the left of the scale 0–360° mark, add 10 to 90 to give a loop bearing of 100°.

b. In the shelter, lock the loop hand wheel by pulling the loop lock (fig. 46) and release the azimuth scale by turning the azimuth scale clamping knob located under the hand wheel (fig. 46). Rotate the azimuth scale until the bearing determined in *a* above (90°, plus or minus a correction) is on the white scale. Lock the azimuth scale and release the hand wheel.

c. If the Adcock antenna is erected when the loop is to be operated, disconnect the Adcock antenna cables at the signal goniometer or bury the cables their entire length from the antenna to the shelter. Make sure the grounding braid on these cables does not touch anything metallic in the shelter. Lower the four Adcock antenna masts. If these precautions are not taken, the loop will give a strong indication in the direction of the Adcock antenna or cables.

d. It is sometimes advisable to bury the power line the entire length from the power unit to the shelter. Reradiation from the power line may cause bearing errors.

e. Make sure all grounds from the equipment to the operating table, from the operating table to the floor, from the shelter screen (inside end panels and roof) to the floor, and the floor to any ground stake are tight. Poor grounds will cause bearing errors and noisy operation.

48. Alinement of Propeller-Shaped Pattern (Crossed-Loop Antenna)

The crossed-loop antenna is oriented when the north-south loop is oriented as directed in paragraph 46. When the crossed-loop antenna is to be used, the position of the propeller-shaped pattern on the cathode-ray tube must be adjusted so that it corresponds to the physical orientation of the crossed-loop antenna.

a. In the shelter, set the hand wheel in the rf amplifier to read 90° on the white scale of the rf amplifier azimuth scale. Pull the loop lock (fig. 46) to lock the hand wheel in this position.

b. Connect cables W201 and W202 to J403 or J503 and J404 or J504 on the signal goniometer. Disconnect the cables connected to J401 or J501 and J402 or J502 on the signal goniometer.

c. Set the radio transmitter directly north of the crossed-loop antenna (0° bearing) approximately 500 feet from the shelter. Transmit a cw signal at 5 mc (pars. 80 and 81) for the low-frequency goniometer (Electrical Goniometer GO–5/GRD) or 18 mc for the high-frequency goniometer (Electrical Goniometer GO–6/GRD), depending on which goniometer is installed on the right side of the goniometer drive.

d. Follow the procedures for visual operation using the crossed-loop antenna (pars. 65–67*g*) to obtain the propeller-shaped pattern.

e. Loosen the SWIVEL PLATE LOCK at the top of the goniometer drive housing until the propeller-shaped pattern points to 0° and 180°. Tighten the SWIVEL PLATE LOCK to lock the goniometer housing in this position.

49. Alinement of Propeller-Shaped Pattern (Adcock Antenna)

When the Adcock antenna is to be used, the position of the propeller-shaped pattern on the cathode-ray tube must be adjusted so that it corresponds to the physical orientation of the Adcock antenna. To position the pattern, the signal goniometer housing is rotated. Two methods may be used to orient the pattern with the Adcock antenna. In either method, the Adcock antenna cables W101 through W104 (fig. 138) should be connected to the signal goniometer.

a. Method A.

(1) Disconnect the antenna couplers from the east and west antenna masts and ground these couplers with a wire jumper connected between ground and the coupler antenna contacts.

(2) Set the radio transmitter in line with the north and south antennas (0° bearing) approximately 500 feet away and transmit (pars. 80 and 81) a cw signal at 5 mc for the low-frequency signal goniometer (GO–5/GRD) or 18 mc for the high-frequency signal goniometer (GO–6/GRD), depending on which one is installed on the right side of the goniometer drive (par. 45).

Note.—The radio transmitter should not be set up close to the array for the purpose of checking bearings since the countour of the wave front causes errors up to 6°. The recommended distance between the array and the radio transmitters is approximately 500 feet.

(3) Follow the operating procedure for visual operation using the Adcock antenna (pars. 65–67*g*) to obtain the propeller-shaped pattern.

(4) Loosen the SWIVEL PLATE LOCK at the top of the goniometer drive assembly (fig. 43) to free the swivel plate. If the Adcock antenna system has been erected and positioned as in paragraph 36, rotate the signal goniometer housing until the propeller-shaped pattern points to 0° and 180°. Tighten the SWIVEL PLATE LOCK to lock the signal goniometer housing in this position.

(5) If, for some reason, the Adcock antenna has not been oriented exactly

to north, it is necessary to compensate for the amount of misorientation. Corrections up to 20° can be made in the following manner:

(*a*) Determine the number of degrees and direction that the north antenna is misplaced from north by using the compass at the exact center of the antenna system.

(*b*) Rotate the pattern in the *same* direction and for the same number of degrees as the north deviates from north.

Example. If the north antenna is located 10° east of north, set the propeller pattern to 10° on the azimuth scale. If the north antenna is 7° west of north, set the pattern at 353°.

b. Method B.

(1) Disconnect the east (blue) and west (brown) antenna cables at the signal goniometer and connect a 100-ohm resistor from each goniometer connector center contact to ground.

(2) Proceed as in method A and follow steps (2), (3), (4), and if necessary (5) (*a* above).

50. Alinement of Bearing Indicator Scale

a. General. Before the bearing indicator scale on the goniometer drive can be used to take aural-null bearings, the index on the scale must be adjusted so that the aural-null bearings obtained on the bearing indicator scale correspond to the visual bearings obtained on the azimuth indicator. The index is adjusted so that the readings correspond to either the readings obtained by using the Adcock or crossed-loop antenna, depending on which is to be used.

b. Crossed-Loop. If the propeller-shaped pattern was alined by using the crossed-loop antenna (par. 48), proceed as follows:

(1) Set the rf amplifier hand wheel as directed in paragraph 48*a*, make the cable connection as directed in paragraph 48*b*, and set up the radio transmitter as directed in paragraph 48*c*.

(2) Follow the operating procedure for aural-null operation using the crossed-loop antenna (par. 72*a–d*).

(3) The weakest or zero signal will occur at two positions; that is when the 0° mark, on the white scale or the 0° mark on the red scale line up or are near the index. Use the 0° mark on the white scale.

(4) Loosen the INDEX LOCK at the top of the goniometer drive assembly (fig. 43) and move the index arm until the engraved index mark is directly opposite the 0° mark on the white scale.

(5) Make sure the bearing indicator scale remains adjusted to the null position and tighten the INDEX LOCK to lock the index in this position.

c. Adcock. If the propeller-shaped pattern was aligned by using the Adcock antenna, (par. 49), proceed as follows:

(1) Ground the east and west antenna connectors as directed in either paragraph 49*a*(1) or *b*(1) and set up the radio transmitter as directed in paragraph 49*a*(2).

(2) Follow the operating procedure for aural-null operation using the Adcock antenna (par. 72*a–d*).

(3) If the Adcock antenna has been oriented to north, the weakest or zero signal will occur at two positions; that is, when the 0° mark on the white scale or the 0° mark on the red scale lines up with or is near the index mark. Use the 0° mark on the white scale.

(4) Loosen the INDEX LOCK at the top of the goniometer drive assembly (fig. 43) and move the index arm until the engraved index mark is directly opposite the 0° mark on the white scale if the Adcock antenna has been oriented to north. If the Adcock antenna had not been oriented to north, set the index mark opposite the same degree mark on the white scale to which the propeller-shaped pattern was set in paragraph 49*a*(5)(*b*).

(5) Make sure that the bearing indicator scale remains adjusted to the null position, and tighten the INDEX LOCK to lock the index in this position.

51. Checking Visual Bearings Using Radio Transmitter T–279/UR

a. General. To check the accuracy of visual bearings obtained with Direction Finder Set

AN/TRD–4A, Radio Transmitter T–279/UR is set up within sight of the antenna. The visual bearings obtained with the direction finder set are checked against the exact position of the radio transmitter as determined by sight bearings. Radio Transmitter T–279/UR is a battery-operated portable unit that emits low-power cw or mcw. For identification of the signal, an audible *tick* is superimposed on the rf signal every 2 seconds. Two procedures for checking the visual bearings using the radio transmitter are given below. The procedure outlined in *b* below is followed when the Adcock antenna is installed, and the procedure outlined in *c* below is followed when the Adcock antenna is not installed.

b. Adcock Antenna.

(1) While the direction finder equipment is warming up, carry the radio transmitter a distance of approximately 500 feet at an azimuth of 315° from the Adcock antenna system. The azimuth can be determined by looking back toward the north and west antennas, and keeping them symmetrically disposed in front of the east and south antennas.

(2) Erect the radio transmitter antenna by pulling it out of the case as far as it will go.

(3) Turn on the radio transmitter (par. 80) and transmit a 5-mc signal for the low-frequency system or 18 mc for the high-frequency system.

(4) Set up the tripod, using the plumb line, so that its center is directly over the center stake of the Adcock antenna system.

(5) Install the compass and the ball and socket on the tripod.

(6) Point the compass sight toward the radio transmitter antenna and read the angle opposite the north end of the needle. This angle will be a magnetic heading if the index is opposite 0 on the graduated scale, and a direct bearing if the scale has been turned by the declination screw on the rim to correct for the magnetic declination in the area (par. 36).

(7) Follow the operating procedure for visual operation, using the Adcock antenna (pars. 65–67).

(8) Press the SENSE switch on the azimuth indicator; this will change the propeller-shaped pattern to an arrowhead pattern, which should point to the azimuth reading obtained on the compass in (6) above.

(9) Bearings may be checked at other desired azimuths and/or frequencies as follows:

(*a*) Set up the radio transmitter at the desired azimuth and set the tuning controls to the desired frequency.

(*b*) Follow the directions in (1) through (8) above to compare the sight bearing with the visual bearing.

c. Crossed-loop Antenna. The visual bearings obtained by using the crossed-loop antenna are checked by operating the direction finder set and the radio transmitter as directed in *b* above. The sight bearings on the radio transmitter are obtained as follows:

(1) After obtaining a visual bearing on the radio transmitter, set up the compass at the radio transmitter sight.

(2) Take a sight bearing on the sense monopole of the crossed-loop antenna.

(3) The visual bearing of the radio transmitter and the sight bearing of the crossed-loop antenna differ by 180°.

CHAPTER 3

OPERATION

Section I. CONTROLS AND INSTRUMENTS

Note.—This section locates, illustrates, and describes the use of the various controls and instruments that are provided for the proper operation of the equipment.

52. General

Haphazard operation or improper settings of the controls can cause damage to the equipment. For this reason, it is important to know the function of every control. The actual operation of the equipment is discussed in paragraphs 61 through 82.

53. Radio Frequency Transmission Line Switch SA–346/GRD (fig. 40)

This is a two-pole two-position switch assembly mounted on top of the electrical equipment cabinet (fig. 13).

Control	Function
R. F. SWITCH	In GONIOMETER position, switch connects output of signal goniometer to antenna terminals of df receiver and grounds output from Radio Frequency Amplifier AM–496/TRD–4. In R. F. AMPLIFIER position, switch connects output of Radio Frequency Amplifier AM–496/TRD–4 to antenna terminals of df receiver and grounds output from signal goniometer.

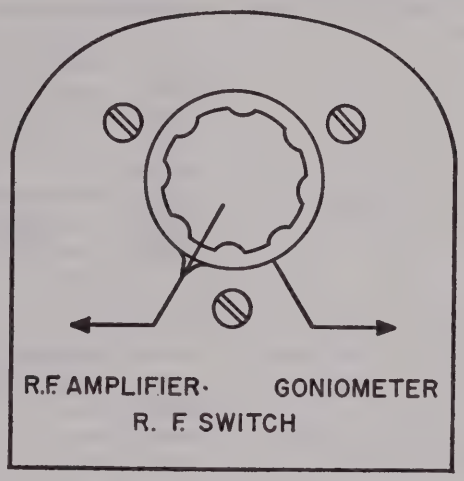

TM 688-220

Figure 40. Radio Frequency Transmission Line Switch SA–346/GRD, front panel control.

54. Switch Box SA–345/U (fig. 41)

Control	Function
Selector switch (S801).	In ON 1 position, connects power unit No. 1 as main power source. In ON 2 position, connects power unit No. 2 as main power source. In ON 3 position, connects power unit No. 3 as main power source. In OFF position, disconnects power sources from equipment.
Convenience outlets jacks (J801 and J802).	In all positions but OFF position of selector switch, 115 volts are available at these jacks.

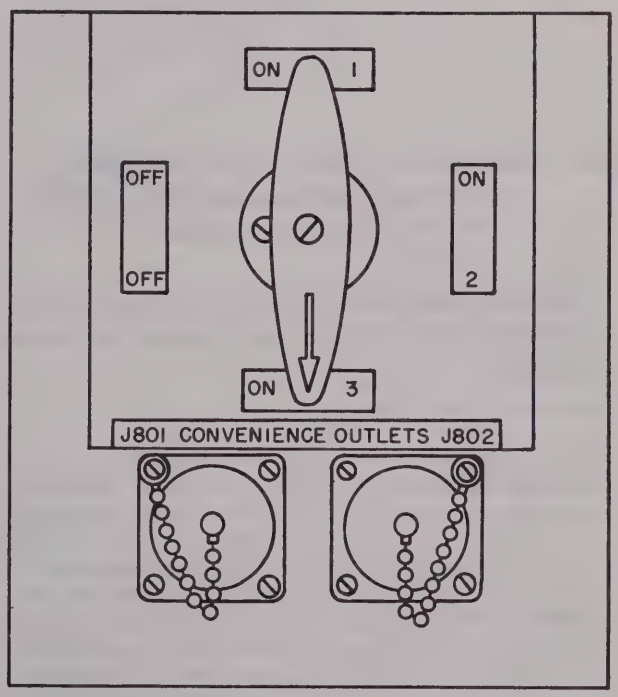

TM 688-84

Figure 41. Switch Box SA–345/U front panel control.

55. Junction Box J–95B/CRD–2 Controls (fig. 42)

The following table lists the controls and instruments of the junction box and their function.

Control and instrument	Function
OUTPUT VOLTAGE meter (M901).	A 0- to 150-volt ac meter that indicates output voltage of junction box.
LINE FREQUENCY meter (M902).	A vibrating reed-type frequency meter with 55- to 65-cycle range. Reed that vibrates at the greatest amplitude indicates frequency of power supply voltage.
LINE INPUT switch (S901).	A switch that connects input power to proper tap on line voltage transformer T901 for 115- or 230-volt operation.
OUTPUT VOLTAGE CONTROL switch (S902).	A nine-position switch that permits adjustment of ac output voltage to approximately 115 volts.
CIRCUIT BREAKERS (K901 and K902).	Overload relays with push-to-reset buttons (5- and 10-ampere ratings).
OUTPUT LOAD switch (S903).	A two-pole, three-position toggle switch that applies ac supply voltage to equipment or dummy load. In OFF position, OUTPUT receptacles are disconnected from INPUT receptacles.

56. Goniometer Drive MX–1170/GRD, Electrical Goniometers GO–5/GRD and GO–6/GRD Controls (fig. 43)

The following table lists the controls of the goniometer drive and the goniometers and their function.

Control	Function
Bearing indicator scale	Used to turn goniometer rotors by hand and indicates aural-null bearing when either crossed-loop or Adcock antennas are used.
INDEX LOCK	Used to lock bearing indicator scale index in position that gives correct orientation when using signal goniometer for aural-null operation.
SWIVEL PLATE LOCK	Used to lock signal goniometer housing when propeller-shaped pattern on azimuth indicator is oriented in relation to geographic orientation of Adcock or crossed-loop antenna.
GONIO DRIVE-COLD START switch.	Used to start drive motor B701 at subzero temperatures by connecting an additional starting capacitor to drive motor for increased starting current.
SENSE switch (S401 or S501).	In LOOPS position, selects proper sense phasing network for crossed-loop sense operation. In ADCOCK position, selects proper sense phasing network for Adcock antenna sense operation.

57. Azimuth Indicator IP–137/GRD Controls (fig. 44)

The following table lists the controls of the azimuth indicator and their function.

Control	Function
MAIN POWER switch (S303).	In ON position, applies power to azimuth indicator, GONIO DRIVE switch, df receiver, and rf amplifier.
INDICATOR switch (S304).	In ON position, applies power to azimuth indicator, GONIO DRIVE switch, and alidade scale lights. Operation depends on MAIN POWER switch being in ON position. *Note.* No patterns will appear on cathode-ray tube until GONIO DRIVE switch is in ON position.
GONIO DRIVE switch (S302).	In ON position, applies power to Goniometer Drive MX–1170/GRD and applies high voltage to cathode-ray tube. Operation depends on MAIN POWER and INDICATOR switches being in ON positions.
INTENSITY control (R336).	Varies brightness of cathode-ray tube pattern. Full clockwise rotation results in maximum brilliance.
FOCUS control (R333)	Adjusts sharpness of cathode-ray tube pattern.

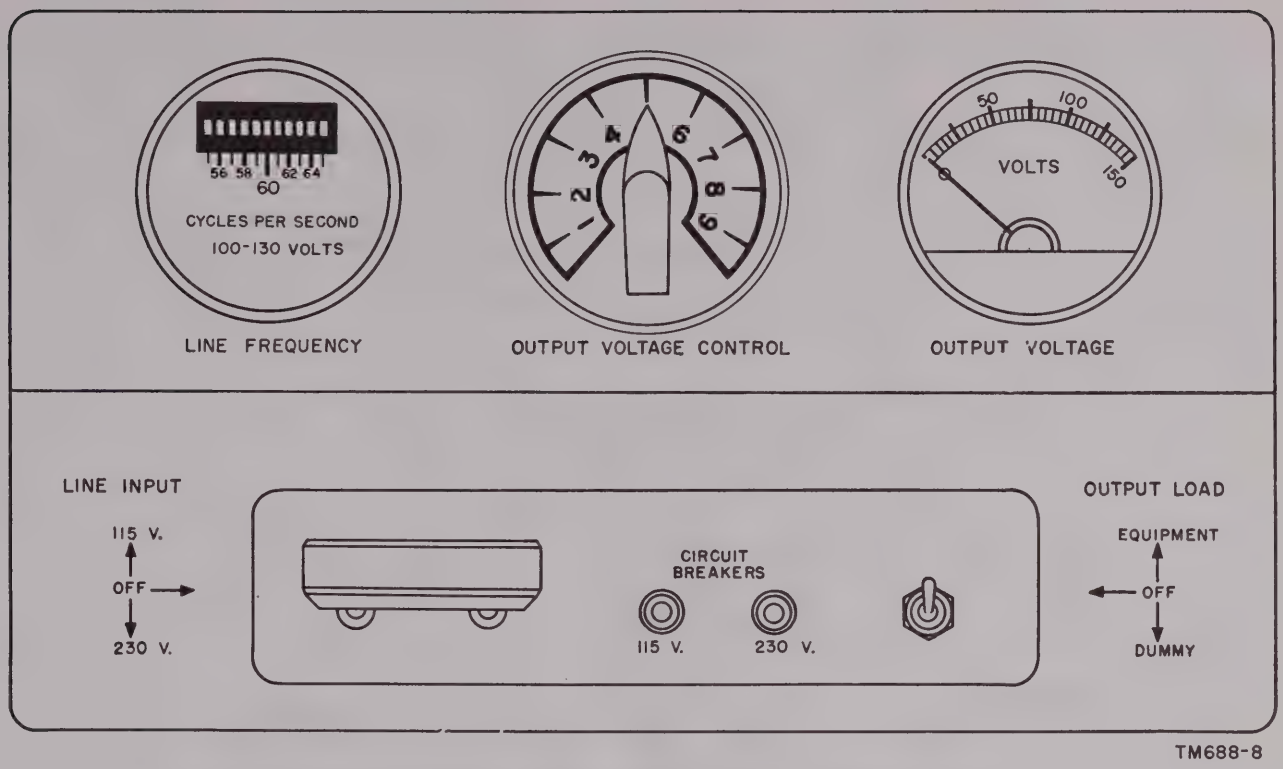

Figure 42. Junction Box J-95B/CRD-2, front panel controls.

Control	Function
HORIZONTAL (R325) and VERTICAL (R326) controls.	Centers cathode-ray tube pattern. HORIZONTAL control moves pattern left when turned counterclockwise and right when turned clockwise. VERTICAL control moves pattern up when turned counterclockwise and down when turned clockwise.
SENSE switch (S301)	When fully depressed, changes bearing pattern (propeller-shaped) to sense pattern (arrowhead) pointing towards direct bearing.
DIMMER control (R361)	Varies degree of light on azimuth scale. Full clockwise rotation results in maximum light.
SIZE control (R313)	Varies diameter of pattern from a dot to 4-inch circle when turned in clockwise direction.
SHAPE control (R320)	Adjusts no-signal pattern shape to conform to circular alidade scale.

58. Radio Receiver R-390/URR Controls (fig. 45)

The following table lists the controls of the radio receiver and their functions.

Control	Function
LINE LEVEL meter	Indicates level of balanced-line output.
LINE METER switch	In OFF position, switch disconnects LINE LEVEL meter from balanced-line output. In ±10 position, 10 decibels (db) are to be added to LINE LEVEL reading; in 0 position, LINE LEVEL meter is read directly; in =10 position, 10 db is to be subtracted from LINE LEVEL reading.
LINE GAIN control	Controls level of audio signal applied to balanced line output terminals.
AGC switch	A three-position switch that controls rapidity of change in gain of radio receiver for change in signal strength.

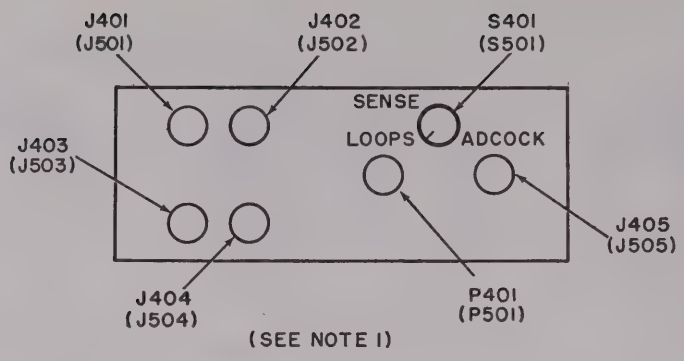

A. GONIOMETER, TOP VIEW

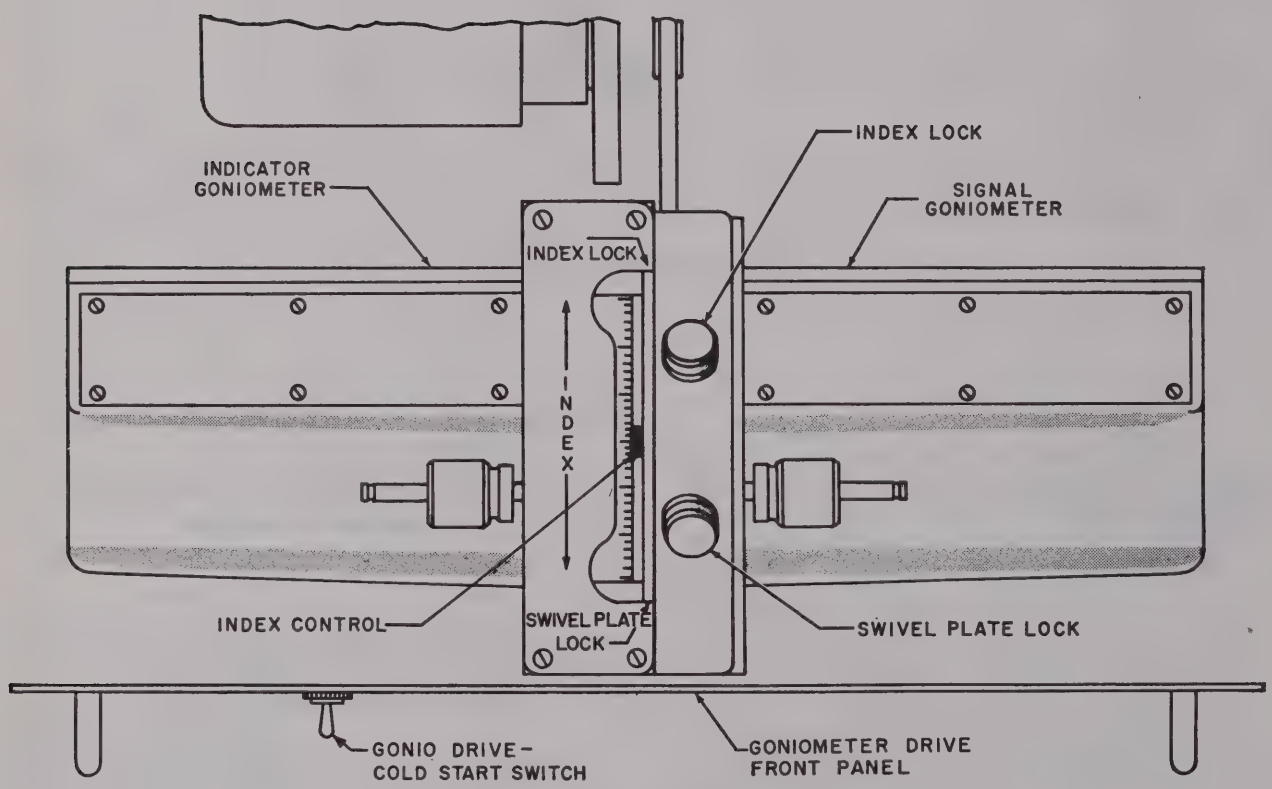

B. GONIOMETER DRIVE, TOP VIEW

NOTE:
REFERENCE SYMBOLS WITHIN PARENTHESES APPLY TO ELECTRICAL GONIOMETER GO-6/GRD, REFERENCE SYMBOLS WITHOUT PARENTHESIS APPLY TO ELECTRICAL GONIOMETER GO-5/GRD. TM688-47

Figure 43. Goniometer Drive MX–1170/GRD, signal and indicator goniometer controls.

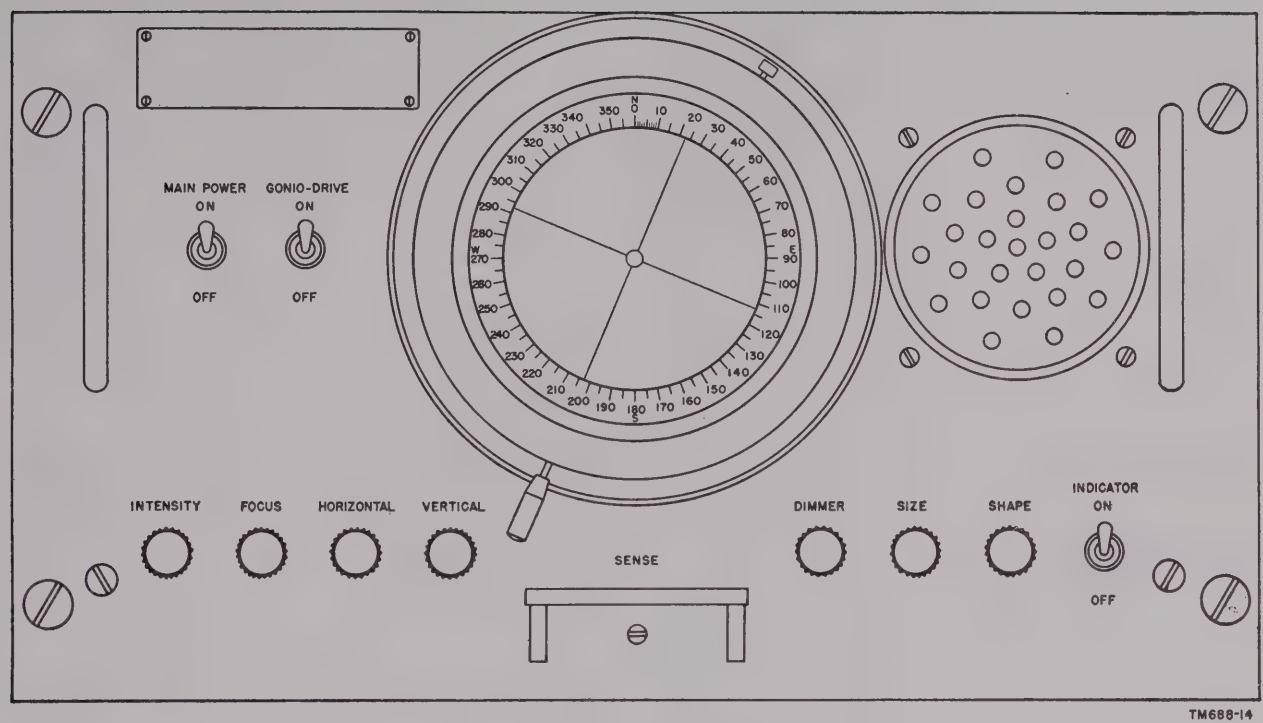

Figure 44. Azimuth Indicator IP-137/GRD, front panel controls.

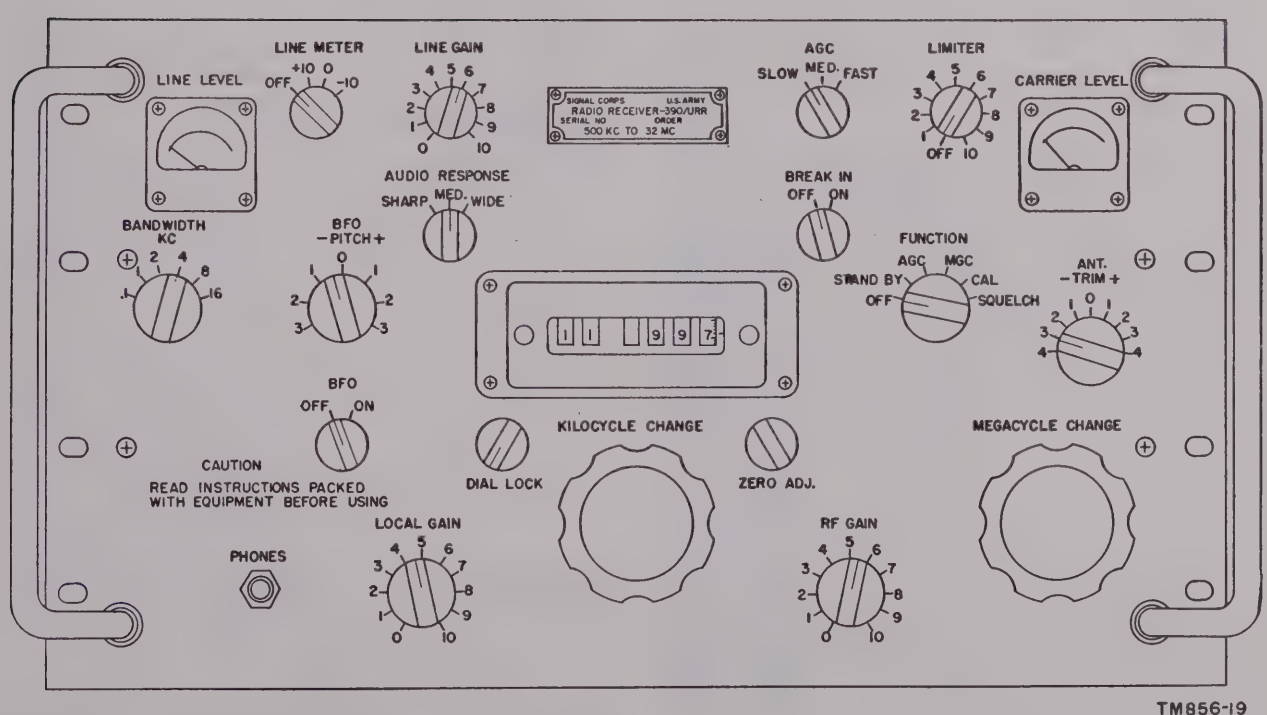

Figure 45. Radio Receiver R-390/URR, front panel controls.

Control	Function
LIMITER switch	In any position other than OFF, switch adjusts limiting of peak signal impulses to reduce static interference. Increased reduction of signal peaks is obtained by clockwise rotation of control.
CARRIER LEVEL meter	Indicates level of incoming rf signals. (Indication of 0 db when RF GAIN control is on 10 position, corresponds to an input signal of from 2 to 5 microvolts.)
BANDWIDTH switch	Selects width of band pass of 455–kilocycles (kc) intermediate-frequency (if) amplifier stages in kc.
BFO PITCH control	Varies frequency of bfo.
AUDIO RESPONSE switch	Varies response of audio amplifier. In SHARP position, an 800-cps band-pass filter is inserted into audio circuit; in MED. position, a 3,500-cps low-pass filter is inserted; in WIDE position, no filter is used.
BREAK IN switch	In ON position, break-in control circuit is connected to REMOTE CONTROL jack J105 and balanced-line output is disconnected from J105.
FUNCTION switch	When rotated to any position other than OFF, switch connects receiver to power source and selects desired radio receiver function. Positions and functions are as follows:

Position	*Function*
STAND BY	Receiver is disabled but filaments remain lighted and oscillators remain on; radio receiver is ready for instant use.
AGC	Gain is controlled automatically for normal reception.
MGC	Automatic gain control (agc) is disabled; gain is controlled manually either by RF GAIN control or by an external gain control.
CAL	Calibration oscillator functions to supply signals at 100-kc points.
SQUELCH	Squelch circuit is connected for silencing receiver when input signal falls below threshold level which is determined by setting of RF GAIN control.

Control	Function
ANT. TRIM control	Provides a means of tuning antenna circuit for maximum signal input.
BFO switch	In ON position, bfo is in operation.
DIAL LOCK	Locks KILOCYCLE CHANGE control to prevent accidental changing of setting.
ZERO ADJ. control	When turned clockwise, disengages frequency indicator from KILOCYCLE CHANGE control for calibration purposes.
LOCAL GAIN control	Controls level of audio signals applied to local output terminals.
RF GAIN control	Controls gain of rf and if amplifiers. When squelch circuit is operating, this control determines threshold level and permits maximum agc when control is in 10 position.
MEGACYCLE CHANGE control.	Selects any one of 32 tuning steps; changes reading of first two digits of frequency indicator.
KILOCYCLE CHANGE control.	Tunes receiver to any frequency within a band, and changes reading of last three digits of frequency indicator. Frequency range of control is slightly greater than 1 mc. When tuned to frequency higher or lower than that indicated by first two digits, a plus or minus sign is displayed in space between mc and kc readings. Plus sign indicates addition and minus sign indicates subtraction of 1 mc from indicated reading to obtain a true reading.
PHONES jack	Provides a means of connecting a headset to radio receiver.

59. Radio Frequency Amplifier AM–496/TRD–4 Controls (fig. 46)

The following table lists the controls for Radio Frequency Amplifier AM–496/TRD–4 and their function.

Control	Function
POWER switch (S204)	In ON position, connects power to rf amplifier. Operation depends on Azimuth Indicator IP–137/GRD, MAIN POWER switch being in ON position.
ANT. SELECT. switch (S201).	In CROSSED LOOP position, crossed-loop antenna is connected to four receptacles on side of case J201, J202, J203, J204 for cable connection to signal goniometer. Simultaneously sense antenna is grounded. *Note.* Visual or aural-null operation using crossed-loop antenna depends on four crossed-loop antenna cables being connected to signal goniometer instead of four Adcock antenna cables.
	In MONITOR position, sense antenna is connected to df receiver through rf amplifier for monitor operation of df receiver. Crossed-loop antenna is disconnected.
	In SINGLE LOOP position, north-south loop is connected to df receiver through rf amplifier for aural-null operation by manual rotation of loop. Terminals of removable (east-west) loop are disconnected.
BAND SWITCH (S203)	Selects desired frequency band: *Band* — *Frequency*: 1 — .54 to 1.35 mc; 2 — 1.35 to 3.45 mc; 3 — 3.45 to 7.40 mc; 4 — 7.40 to 14.8 mc; 5 — 14.80 to 30.0 mc
Tuning dial	Tunes rf amplifier over frequency range of bands selected by BAND SWITCH.
SENSE GAIN control (R204).	Controls amount of sense voltage added to single-loop voltage.
Sense switch (S202)	In full up (direction finder) position, sense circuits are disabled to permit locating the aural null.
	In midposition (halfway down) and full down positions, sense voltage is added to single-loop voltage to indicate on which scale (red or white) true bearing is read (par. 76).
Hand wheel	Rotates single-loop antenna and rf amplifier azimuth scale.
Azimuth scale clamping knob.	When loosened, permits orientation of rf amplifier azimuth scale relative to single-loop position.
Loop lock	Clamps hand wheel and single loop in any desired position.
CROSSED LOOPS SENSE PHASE SWITCH.	In 12–30 MC position, connects sense phasing resistors into circuit.
	In .54–12 MC position, disconnects sense phasing resistors from circuit.
Azimuth scale	Indicates direction of arrival of signal.

Note.—When the rf amplifier azimuth scale is unlocked from the shaft and is rotated, a detent in line with the zero mark on the white scale clicks into a slot in the shaft which is in line with the north end of the single-loop antenna. This detent is useful as a check on the setting of the azimuth scale after the system has been oriented. Pull the loop lock (fig. 46) to lock the shaft of the loop when the white scale reads zero. Turn the azimuth scale clamping knob to unlock the azimuth scale from the shaft. Rotate the azimuth scale until the detent clicks into position. Read the white scale and record the azimuth setting for future reference if the scale setting has been tampered with. The azimuth scale should then be reset to zero and locked to the shaft.

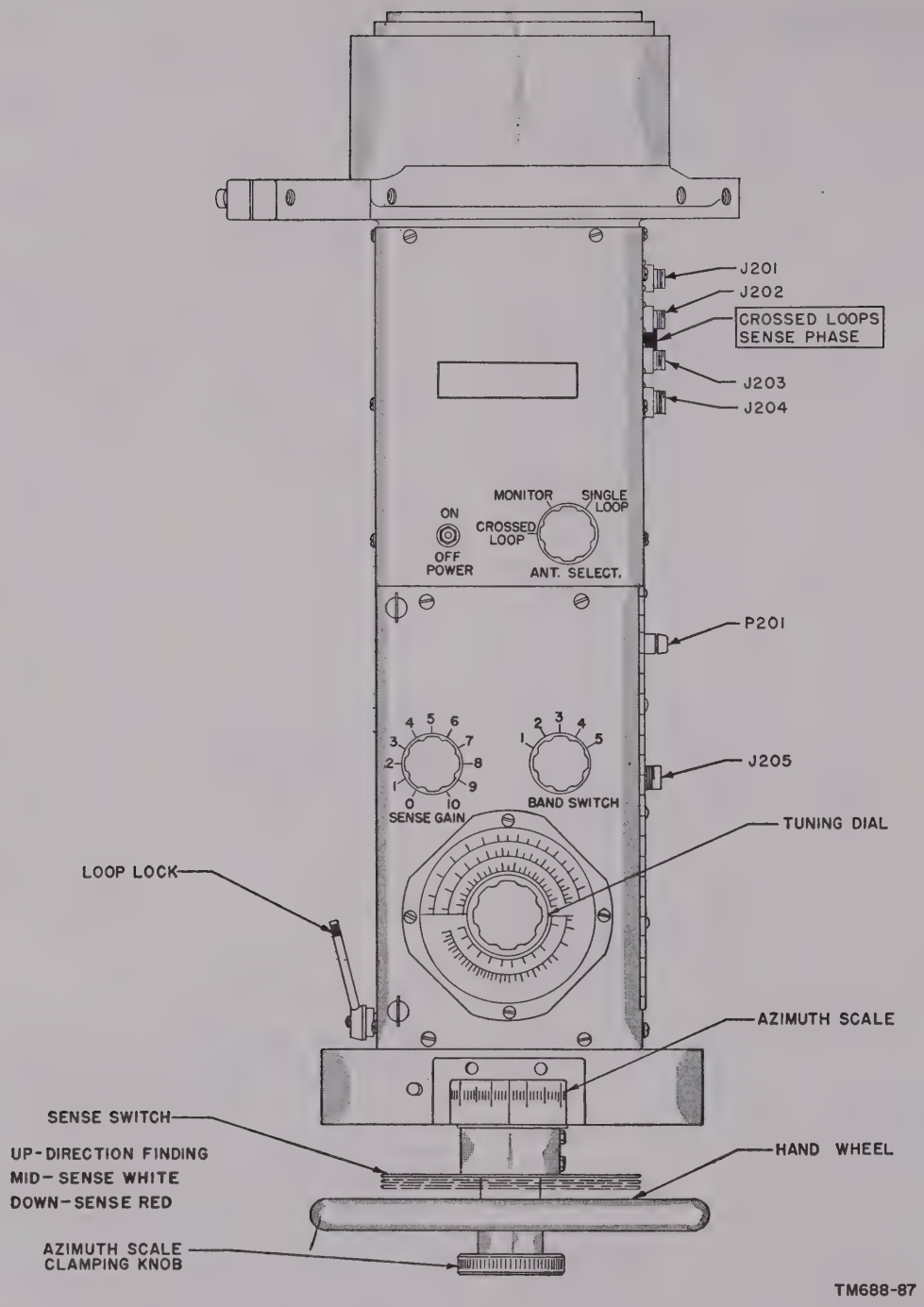

Figure 46. Radio Frequency Amplifier AM-496/TRD-4 controls.

60. Radio Transmitter T–279/UR Controls (fig. 47)

The following table lists the controls for the radio transmitter and their functions.

Control	Function
BANDSWITCH (S603)	A six-position switch that selects frequency band: .5–1MC, 1–2MC, 2–4MC, 4–8MC, 8–16MC, 16–30MC
TRANSMITTER switch (S601).	In ON position, connects radio transmitter to batteries. In OFF position, disconnects radio transmitter from batteries.
CW-MCW switch (S602)	Selects signal, either continuous wave or modulated continuous wave.
OUTPUT control (R609)	Potentiometer that adjusts output power.
Tuning control	Tunes radio transmitter to desired frequency by means of tuning dial. Frequency will be within band selected by BANDSWITCH.

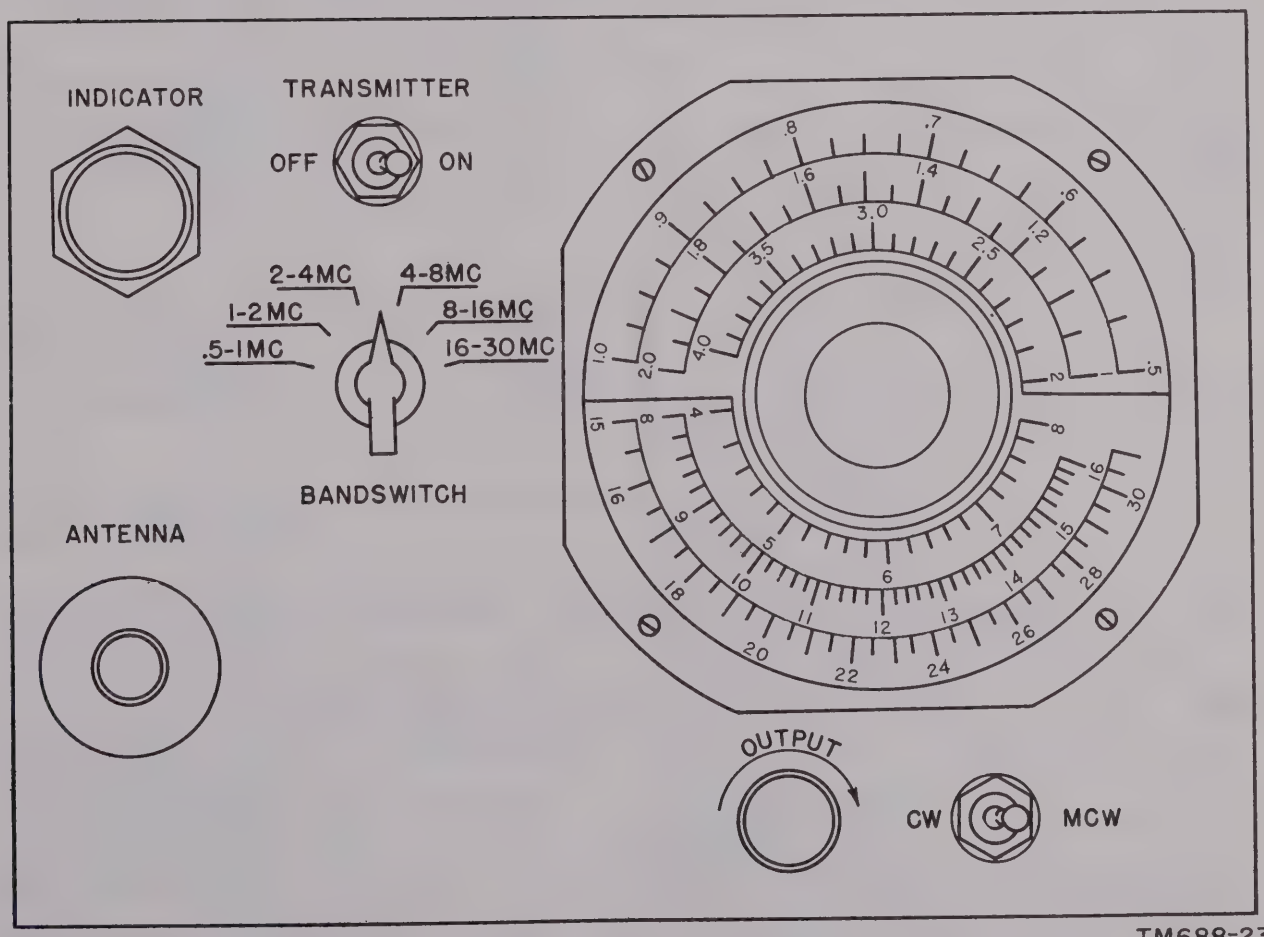

TM688-23

Figure 47. Radio Transmitter T–279/UR, top panel controls.

428027 O -57 -5

Section II. OPERATION UNDER USUAL CONDITIONS

61. General

a. In a complex equipment, such as Direction Finder Set AN/TRD–4A with three df antenna systems and two bearing indication methods, it is necessary to know under what conditions each antenna system and type of indication should be used for best results. The chart below shows the relative advantages and limitations of each antenna system, each type of indication, and when each system is to be used.

b. The mode of operation depends on many factors—distance to the transmitter that determines the type of wave to expect, sky wave or ground wave; path of signal over land or sea; signal from surface transmitter or aircraft; the frequency; the skill of the operator with aural-null equipment; the time of day or night; the amount of traffic and operating speed required; and the time allowed for installation.

62. Advantages and Limitations of Each Antenna System and Type of Indication

System and indication	Advantages	Limitations	When to use
Adcock	*a.* High sensitivity and accuracy at long or short range on both steady ground-wave signals or fluctuating sky-wave signals.	*a.* Takes longer to erect and requires a fairly large site.	*a.* For general use in taking long or short range bearings on either ground-wave or sky-wave signals.
		b. Has decreased accuracy and sensitivity at very low frequency (below 1.5 mc).	*b.* When the time allowed permits installation.
			c. For all bearings on aircraft signals.
Crossed-loop and rotatable single-loop.	*a.* Below 1.5 mc gives more reliable bearings than Adcock (but only in daytime or on short distance transmitters at night).	*a.* Subject to polarization error.	*a.* For short range bearings on steady ground waves.
	b. Rapid installation and simple site requirements.	*b.* Bearings not reliable on long range sky-wave signals or on aircraft signals.	*b.* For locating very low-power transmitters, use rotating single-loop antenna.
Aural-null	*a.* Can use greater df receiver selectivity to reduce noise and outside interference.	*a.* Slowness	*a.* When visual indicator fails.
	b. Can take separate bearings on interfering signals (when used with beat-frequency oscillator).	*b.* Less positive sensing	*b.* Used with beat-frequency oscillator on interfering signals.
	c. Increases operational utility under conditions of cochannel interference and severe noise.	*c.* Greater operator skill required.	*c.* Used with beat-frequency oscillator and sharp selectivity on very weak signals.
Visual	*a.* High operating speed	*a.* Used only in fixed and semifixed positions.	*a.* When short transmission does not allow time to take aural-null bearing.
	b. Visual-sense indication is always very positive.		*b.* When less skilled operators must use equipment.
	c. Less operator skill required		*c.* When there is heavy traffic requiring high operating speed.
			d. For bearings on aircraft signals.

63. Reliability of Ground and Sky Waves

a. Ground Waves Using Loop Antenna. The following table lists the reliable range of ground waves received with the loop antenna.

Frequency	Transmitter	Time	Surface	Reliable range
500 kc to 3 mc	Surface	Day	Sea water	0 to 300 miles or until sound can no longer be heard.
	Surface	Day	Land	0 to 200 miles.
	Airborne	Day or night	Land and sea water	10 miles until sound can no longer be heard. (Results are doubtful between 0 and 10 miles.)
	Surface and airborne	Night	Land and sea water	50 to 75 miles.
Above 3 mc	Surface	Day	Sea water	0 to 100 miles.
	Surface	Day	Land	50 to 100 miles.
	Airborne	Day or night	Land or sea water	10 to 50 miles. (Results are doubtful between 0 and 10 miles.)

b. Sky Waves Using Loop Antenna. The results obtained from sky waves using the loop antenna are not reliable at any range.

c. Ground and Sky Waves Using Adcock Antenna. As a general rule, if a signal can be read and is not fading rapidly, the results obtained by using the Adcock antenna are reliable at all ranges for all types of waves at any time of day or night. If a pattern is swinging badly, a skilled operator can read the bearing at a favorable moment. Refer to the pattern interpretation information described in paragraph 69.

64. Types of Operation

The table below lists the five separate modes of operation of this system for direction finding. Refer to paragraph 44 to aline the bearing scale for the type operation selected.

Type of operation	Antenna	Indicator	Bearing scale	Par. ref
Visual	Adcock	Cathode-ray tube	Alidade scale assembly	67
Visual	Crossed-loop	Cathode-ray tube	Alidade scale assembly	67
Aural-null	Adcock	Loudspeaker or headphones	Goniometer drive bearing indicator scale.	72
Aural-null	Crossed-loop	Loudspeaker or headphones	Goniometer drive bearing indicator scale.	72
Aural-null	Single-loop and sense monopole.	Loudspeaker or headphones	Azimuth scale on rf amplifier	76

65. Preliminary Starting Procedure, Azimuth Indicator

a. Set the MAIN POWER, GONIO DRIVE, and INDICATOR switches in the OFF positions.

b. Rotate the INTENSITY and FOCUS controls fully counterclockwise.

c. Set the HORIZONTAL and VERTICAL controls at midposition.

d. Rotate the DIMMER control fully clockwise.

e. Rotate the SIZE control fully counterclockwise.

f. Set the SHAPE control at the midposition.

66. Preliminary Starting Procedures, Df Receiver and Signal Goniometer

a. Set the BANDWIDTH switch in the 2 kc position.

b. Set the BREAK IN switch in the OFF position.

c. Set the LIMITER switch in the OFF position.

d. The KILOCYCLE CHANGE control and the MEGACYCLE CHANGE switch may be set if the operating frequency is known.

e. Set the AUDIO RESPONSE switch in the MED. position.

f. Rotate the LOCAL GAIN control fully clockwise to 10.

g. Set the BFO switch in the OFF position.

h. Set the AGC switch in the MED. position.

i. Rotate the RF GAIN control fully counterclockwise to 0.

j. Set the BFO PITCH control to 0.

k. Set the LINE GAIN control to 0 and the LINE METER switch in the OFF position.

l. For operation with the Adcock antenna, connect the four Adcock antenna cables (W101 through W104) to the signal goniometer (fig. 138) and set the SENSE switch on the signal goniometer in the ADCOCK position.

Note. The propeller-shaped pattern must have been oriented by using the Adcock antenna (par. 49).

m. For operation with the crossed-loop antenna, connect the four crossed-loop antenna cables to the signal goniometer (fig. 138) and set the SENSE switch on the signal goniometer to the LOOPS position.

Note. The crossed-loop antenna must be oriented to north (par. 46), and the propeller-shaped pattern must have been oriented by using the crossed-loop antenna (par. 48).

67. Starting Procedure Visual Operation (Adcock or Crossed-Loop Antenna)

a. Switch Box.

(1) Check to see that the power source connected to the switch box is a 115-volt ±10 percent, 47- to 63-cps, 5,000-watt, ac power source (par. 37*a*).

(2) Check to see that the selector switch is on the position which connects the power source to the output terminals.

b. Junction Box (fig. 42)

(1) Set the OUTPUT LOAD switch to the DUMMY position. The dummy load built into the junction box is designed to dissipate approximately 400 watts.

(2) Set the LINE INPUT switch to the 115 V. position. The normal indications are—

(*a*) The OUTPUT VOLTAGE meter may indicate more or less than 115 volts.

(*b*) The LINE FREQUENCY meter should indicate approximately 60 cps if the power source is nominally rated at 60 cps.

(3) Adjust the OUTPUT VOLTAGE CONTROL until the OUTPUT VOLTAGE meter indicates approximately 115 volts.

(4) Set the OUTPUT LOAD switch in the EQUIPMENT position.

c. Rf Switch (fig. 40). Set the R.F. SWITCH in the GONIOMETER position.

Note. If visual operation with the crossed-loop antenna is desired, the ANT. SELECT. switch on the rf amplifier (fig. 46) must be in the CROSSED LOOP position and the CROSSED LOOP SENSE PHASE switch set to the desired frequency range.

d. Azimuth Indicator (fig. 44).

(1) Set the MAIN POWER and INDICATOR switches in the ON positions. The azimuth indicator and goniometer drive azimuth scale dial lamps should light.

(2) Set the GONIO DRIVE switch in the ON position. The goniometer drive motor will function as indicated by the rotation of the bearing indicator scale on the goniometer drive.

e. Df Receiver (fig. 45). Set the FUNCTION switch in the MGC position to apply power to the df receiver.

Note.—After performing this step, allow 15 minutes for the equipment to warm up. Check the OUTPUT VOLTAGE meter on the junction box and readjust the OUTPUT VOLTAGE CONTROL on the junction box to obtain a reading on the meter of approximately 115 volts.

f. Azimuth Indicator (fig. 44).

(1) Rotate the INTENSITY control clockwise until illumination is observed on the cathode-ray tube screen.

Caution: Avoid excessive brightness, since damage to the tube may result.

(2) Rotate the FOCUS control clockwise until a sharply defined small dot is obtained.

(3) Adjust the HORIZONTAL and VERTICAL controls to center the dot.

Note.—It is very important that the dot be exactly centered or bearing errors will result.

(4) Adjust the DIMMER control for comfortable azimuth scale viewing.

(5) Turn the SIZE control clockwise until the extremities of the illuminated area are just within the inner diameter of the azimuth scale.

(6) Adjust the SHAPE control to obtain a circular pattern (refer to par. 216 for the alinement of the azimuth indi-

cator). Readjust the SIZE control if necessary ((5) above).

(7) Readjust the INTENSITY control for a comfortable viewing level, and adjust the FOCUS control for a clearly defined circle.

g. Df Receiver (fig. 45).

(1) Rotate the RF GAIN control fully clockwise and adjust the LOCAL GAIN control for a comfortable audio noise level from the loudspeaker located on the front panel of the azimuth indicator.

(2) Turn the MEGACYCLE CHANGE switch to the band within which a strong signal of known azimuth can be received.

Note.—Set the BANDWIDTH switch in the 2 kc. position for visual bearings or large errors will result. Set the FUNCTION switch in the MGC position for all direction finding operations. Do not use the AGC position.

(3) Adjust the KILOCYCLE CHANGE control until the signal causes the pattern to decrease in size. Reduce the RF GAIN control and adjust the KILOCYCLE CHANGE and ANT. TRIM controls for maximum signal strength. Adjust the RF GAIN control until a propeller-shaped pattern (A, fig. 3) appears). Readjust the KILOCYCLE CHANGE and ANT. TRIM controls so that the sides of the propeller-shaped pattern pull into the center the greatest amount.

h. Azimuth Indicator.

(1) Loosen the alidade locking screw (fig. 16) and rotate the alidade adjust knob to bisect the propeller-shaped pattern with the cross hairs to obtain accurate direct and reciprocal bearings on the azimuth indicator scale surrounding the cathode-ray tube. Tighten the alidade locking screw.

(2) Press the SENSE switch. The propeller-shaped pattern will change to a sense pattern as illustrated in B, figure 3. The arrowhead (sense) pattern will indicate which of the readings obtained in (1) above is the direct bearing by pointing in the direction of the direct bearing.

Note.—Sense reversal may occur if the SENSE switch on the signal goniometer is not set for the antenna being used (crossed-loop or Adcock) or if the CROSSED LOOPS SENSE PHASE switch on Radio Frequency Amplifier AM–496/TRD–4 is not set to the frequency band that includes the received signal (.54–12 mc) or (12–30 mc) when the crossed-loop antenna is used.

i. Octantal Error. When using the high-frequency arrangement of the Adcock antenna and the frequency of the received signal is greater than 6 mc, refer to paragraph 70 for the octantal error correction.

j. Df Receiver. Visual bearings on all types of signals are obtained when the BFO switch is in the OFF position. For aural monitoring of cw signals, set the BFO switch in the ON position and adjust the BFO PITCH control for the desired tone.

Note.—When the Adcock antenna is used for aural monitoring, it is necessary for the goniometer to be rotating, even if the 54-cycle modulation is objectionable. If the goniometer is stopped, signals coming from the null directions will not be heard. After the desired signal is located, the goniometer can be stopped and rotated to maximum so that positive signal identification can be made.

68. General Operating Information and Pattern Interpretation (Adcock or Crossed-Loop Operation)

a. The pattern produced by a strong, vertically polarized signal should be clean, sharp, and steady when either the Adcock or the crossed-loop antenna is used. This type of pattern gives a bearing of the highest reliability. Some patterns will swing, change shape, and spin. In crossed-loop operation such patterns are highly unreliable but, in Adcock antenna operation, a careful operator can interpret them and obtain fairly reliable bearings. Patterns with ragged edges caused by noise are prevalent when the received signals are weak or moderately weak, but a careful operator can read reliable bearings from them. When two signals are heard simultaneously on approximately the same frequency, a weak signal under a strong one, the indicator will tend to show the bearing nearest to that of the stronger signal. If one or both of the interfering signals are keyed, three patterns may appear. Two of these bearings are reliable individual bearings for the two interfering signals the third is a composite unreliable bearing. The indi-

Figure 48. Cathode-ray tube presentations (bearing patterns).

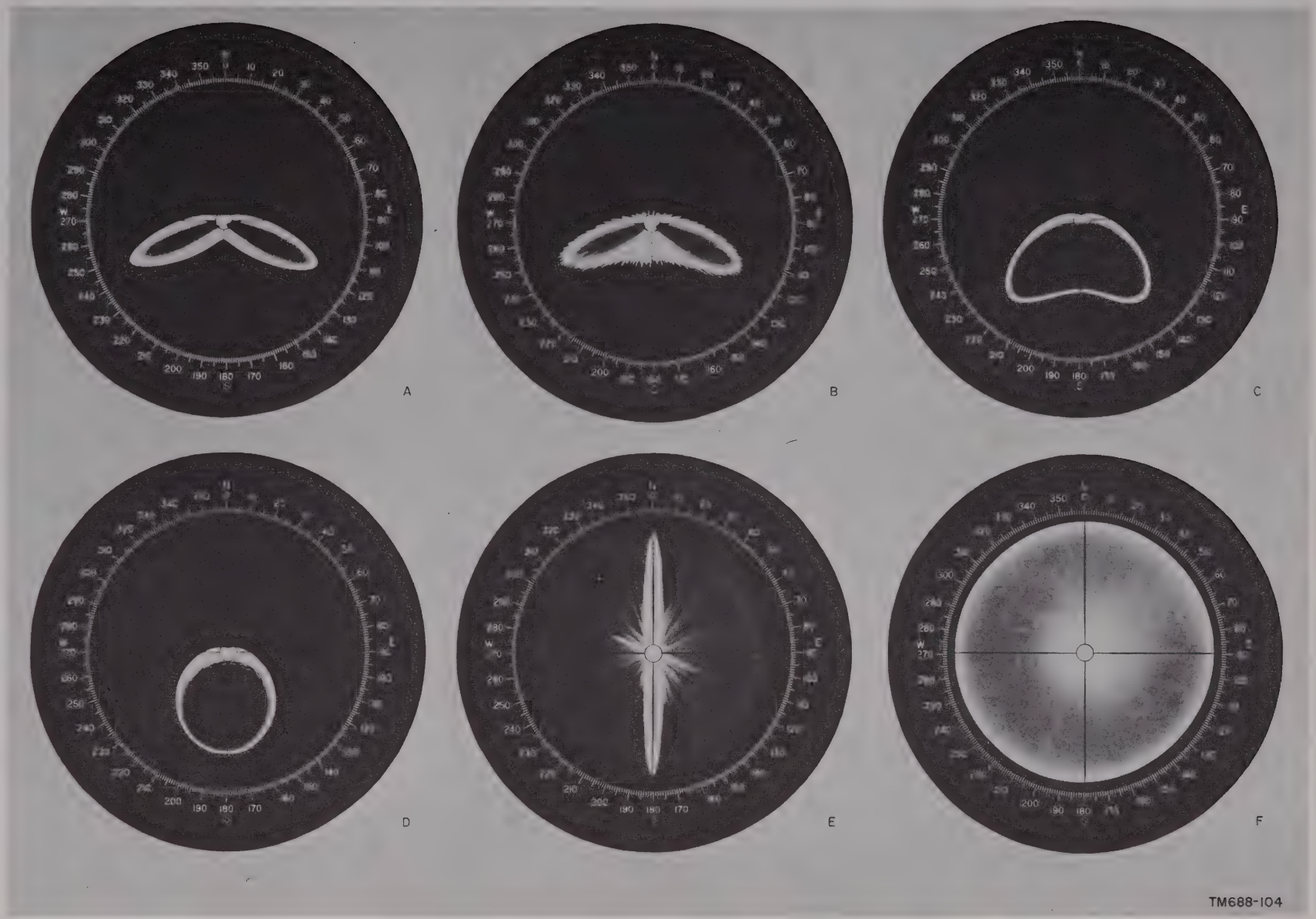

Figure 49. Cathode-ray tube presentations (sense patterns).

vidual bearings of several interfering signals can almost always be determined with high reliability by using the aural-null method with the receiver beat-frequency oscillator (par. 72).

b. When obtaining bearings with the high-frequency signal goniometer (Electrical Goniometer GO–6/GRD) and the high-frequency Adcock antenna installation, it is useful in some cases to apply corrections for octantal error. A copy of the table of octantal error corrections shown in figure 50 can also be mounted on the front panel of the goniometer drive.

Note.—It should be noted that the values of octantal error corrections shown apply only for waves arriving at very low angles to the ground. Octantal errors are negligible at frequencies below 10 mc when using Electrical Goniometer GO–5/GRD and the low-frequency antenna installation.

c. The correct signal goniometer and Adcock antenna installation must be used for each frequency range as follows:

(1) From .54 mc to 10 mc, use the low-frequency signal goniometer (Electrical Goniometer GO–5/GRD). Adcock antenna height is 29 feet with loading disks, and antenna spacing is 33 feet (A, fig. 5).

(2) From 8 mc to 30 mc, use the high-frequency signal goniometer (Electrical Goniometer GO–6/GRD). Antenna height is approximately 23 feet without loading disks, and antenna spacing is 18 feet 10 inches (B, fig. 5).

d. Sense is not reliable below 1 mc. It may be reversed or there may be no sense at all.

e. The df receiver RF GAIN control is set normally to the position which just barely closes the bearing pattern at the center. If the pattern reduces to a dot when the SENSE switch is depressed, the RF GAIN should be reduced to form a readable sense pattern. Excessive RF GAIN results in a spikelike pattern which contains less information as to when to read with accuracy when bearings are swinging (2 and 3, par. 69).

f. Bearing patterns as illustrated in figure 48 are as follows:

A. Normal bearing pattern, strong signal.
B. Normal bearing pattern, moderately weak signal.
C. Normal bearing pattern, weak signal.
D. Normal bearing pattern, extremely weak signal.
E. Symmetrically split bearing pattern, strong signal.
F. Normal bearing pattern, strong signal with weak modulation.

g. Patterns as indicated in figure 49 are as follows:

A. Sense pattern, strong signal and medium sense voltage.
B. Sense pattern, weak signal.
C. Sense pattern, strong signal and medium sense voltage with lower setting of RF GAIN control than for pattern A.
D. Sense pattern, strong signal and high sense voltage.
E. Pattern with cw keyed signal.
F. Pattern with no signal from df receiver.

69. Pattern Interpretation

Type of indication	Characteristics	How or when to read bearing most effectively	Reliability and interpretation of bearing
1. Steady indication on a cw signal, an interrupted cw signal, or a modulated signal.	Sharp propeller tips (fig. 48Ⓐ) does not swing more than 1°, no fading.	Read anytime after tuning in; use cross hairs.	Very reliable.
2. Swinging or slightly fading indications on any signal.	Propeller tips sharp at times; when signal fades, propeller tips may get slightly round and signal may swing 3° to 6°.	Read when signal is strongest and tips are sharp; or watch swing and set cross hairs at midpoint about which the pattern is swinging.	Very reliable if read carefully; swinging is usually caused by space-diversity effects which cause signal to fade at a different time for each antenna.
3. Badly fading and swinging indication on any signal.	Propeller tips sharp at times; signal fades very slowly and at the same time swings 10° or 20° or rotates very slowly; pattern almost disappears at times.	Pattern may stop for just a moment at a certain point when signal will be strongest and tips sharp: watch for for these stops and set cross hair immediately. If pattern seems to stop at same bearing every time after it fades, read bearing at that point. If stopping points vary and signal is very wild, do not take a reading unless it is absolutely necessary.	Reliability depends on experience of the operator; a very slow, gradual change in polarization of received signal causes large changes and differences in voltage induced in individual antennas and results in a badly swinging and rotating pattern.
4. Steady or slightly swinging indication on a weak signal.	Poorly defined, fuzzy propeller tips (C, fig. 48).	Use cross hairs and read when signal is strongest.	Reliable if read carefully when signal is steady. (Weak signal pattern is shown in D, fig. 48.)
5. Symmetrically split indication (E, fig. 48).	Propeller-shaped patterns, equal in length with tips which are from 2° to 10° apart.	Set cross hairs and read at intersection of pattern (midway between points). If signal is fading or swinging, follow additional instructions given in item 2 above.	Reliable. If more than 10 percent of patterns are split, cable connectors and ground straps should be checked.
6. Unsplit indication with draw-in.	Two propeller-shaped patterns unequal in length with tips which are on same radial line (usually tips of shorter propeller blade are rounded).	If draw-in is steady, use cross hairs as for normal indication. If draw-in varies, read when signal is strongest and propeller tips are sharp.	Reliable if read carefully and not swinging more than 7° or 8°. If more than 10 percent of pattern is drawn-in, check ground straps, cables and connectors.
7. Nondirectional pattern.	Irregular circle that cannot be pulled in at center. Occurs when signal arrives straight down on antenna array.	Bearings cannot be read.	

70. Octantal Error (fig. 50)

a. General. An error known as octantal error is encountered with Direction Finder Set AN/TRD–4A when used in the frequency range of 6 to 30 mc. The error is a function of the Adcock antenna mast spacing, the angle of signal arrival, and the frequency of the received signal.

b. Octantal Error Correction Chart. An octantal error correction chart for the high-frequency antenna installation (18-ft 10-in. antenna spacing) is shown in figure 50. This chart is useful only for obtaining correction values for low angle or horizontal waves. Down-coming waves, from aircraft or sky waves, need less correction and, since it is difficult to judge the angle of signal arrival on sky-wave signals, corrections can only be approximate. In general, for sky-wave signals, the higher the frequency and greater the distance, the lower the angle.

Example 1: If the observed azimuth bearing on the indicator is 110° at a frequency of 24 mc, reference to the error correction chart (fig. 50) shows that 5° must be subtracted from the observed bearing of 110° in order to obtain 105°, the correct bearing.

Example 2: If the observed bearing on the indicator is 75° at a frequency of 18 mc, reference to the error correction chart shows that 2.5° must be added to the observed bearing of 75° to obtain 77.5°, the correct bearing.

Note.—To determine the octantal error correction for signals on frequencies other than those shown on the chart (fig. 50), interpolate between the curves shown.

c. Correction With Misoriented Adcock Antenna. If the Adcock antenna is not oriented physically to either true or magnetic north (par. 36*b*), the octantal error correction chart cannot be used directly. The following text describes what must be done to use the octantal error correction chart for the above condition.

(1) If the Adcock antenna system is oriented east of either true or magnetic north, subtract from the observed bearing the number of degrees that the antenna system is misoriented east of either true or magnetic north. The remainder then is used (instead of the observed bearing) to determine the correction by using the octantal error correction chart. The correction indicated on the chart is applied to the original observed bearing.

Example: If the antenna system is physically oriented to 10° east of either true or magnetic north, and the observed bearing for an 18-mc signal is 33°, subtract 10° from 33°. Using the remainder, 23°, determine the correction by using the error correction chart. Reference to the error correction chart shows that 3.0° must be subtracted from the original observed bearing of 33° to obtain the correct bearing of 30°.

(2) If the antenna system is oriented west of either true or magnetic north, add to the observed bearing the number of degrees that the antenna system is misoriented west of either true or magnetic north. The sum then is used (instead of the observed bearing) to determine the correction by using the octantal error correction chart. This correction as indicated by the chart is applied to the original observed bearing.

Example: If the antenna system is oriented physically to 10° west of either true or magnetic north and the observed bearing for a 24-mc signal is 46°, add 10° to the 46°. Using the sum 56°, determine the correction by using the octantal error correction chart. Reference to the octantal error correction chart shows that 5° must be added to the original observed bearing of 46° to obtain the correct bearing of 51°.

d. Fixed-Error Calculator. Fixed-Error Calculator MX–336/U with an 18-foot 10-inch pointer (not supplied with Direction Finder Set AN/TRD–4A) may be used in place of the octantal error correction chart.

71. Stopping Procedure Visual Operation (Adcock Antenna)

a. Emergency or Standby Stopping. Set the LINE INPUT switch (fig. 42) on Junction Box J–95B/CRD–2 in the OFF position.

b. Normal Stopping.

(1) Set the FUNCTION switch on the df receiver in the OFF position.

(2) Set the MAIN POWER switch on the azimuth indicator in the OFF position.

(3) Set the LINE INPUT and OUTPUT LOAD switches on Junction Box JB–95B/CRD–2 in the OFF positions.

72. Starting Precedure Aural-Null Operation (Adcock or Crossed-Loop Antenna)

a. Preliminary Starting Procedure.

(1) Perform the preliminary starting procedures in paragraphs 65 and 66.

(2) Perform the starting procedure for visual operation by using either the Adcock or crossed-loop antenna in paragraph 67*a* and *b*.

(3) Set the R.F. SWITCH in the GONIOMETER position.

(4) If aural-null operation with the crossed-loop antenna is desired.

(*a*) Set the ANT. SELECT. switch on the rf amplifier in the CROSSED LOOP position.

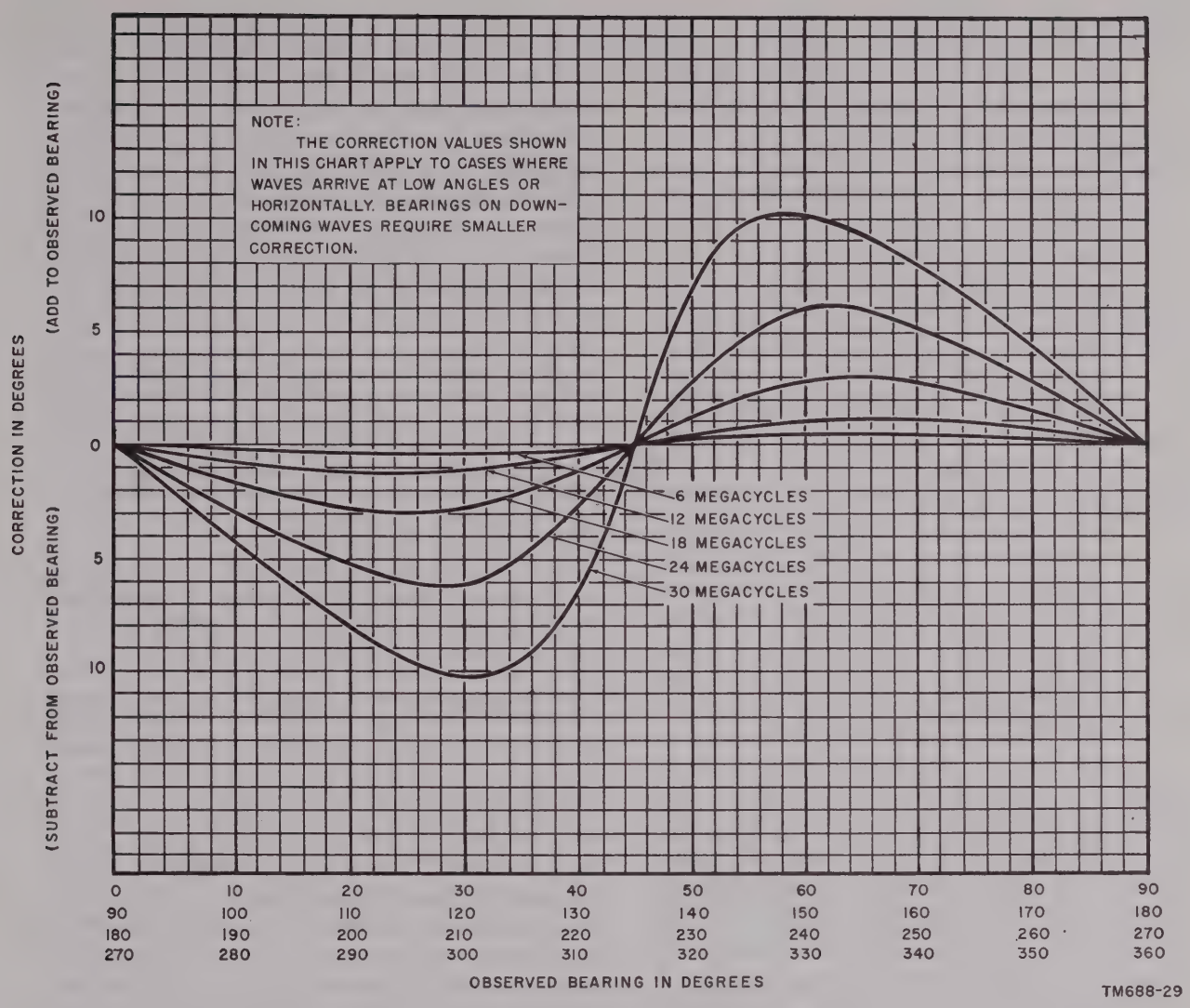

Figure 50. Octantal error correction chart for high-frequency antenna installation (18-ft 10 in. diagonal spacing).

(*b*) Set the CROSSED LOOP SENSE PHASE switch on the rf amplifier to the desired frequency range.

(*c*) Set the SENSE switch on the signal goniometer in the LOOPS position.

(*d*) Cables W201 through W204 (fig. 138) must be connected from the rf amplifier to the signal goniometer.

(*e*) The crossed-loop antenna must have been oriented to north (par. 46) and the bearing indicator scale on the goniometer drive must have been oriented using the crossed-loop antenna (par. 50*b*).

(5) If aural-null operation with the Adcock antenna is desired:

(*a*) Set the SENSE switch on the signal goniometer in the ADCOCK position.

(*b*) Cables W101 through W104 (fig. 138) must be connected from the Adcock monopoles to the signal goniometer.

(*c*) The Adcock antenna must have been oriented (par. 36) and the bearing indicator scale on the goniometer drive must have been oriented using the Adcock antenna (par. 50*c*).

b. Azimuth Indicator (fig. 44). Set the MAIN POWER and INDICATOR switches in the ON positions. The azimuth indicator and goniometer drive azimuth scales dial lamps should light.

c. Df Receiver (fig. 45).

(1) Set the FUNCTION switch in the AGC position to apply power to the df receiver and allow 15 minutes for the equipment to warm up.

(2) Rotate the RF GAIN control fully clockwise. Advance the LOCAL GAIN control for a comfortable noise level from the loudspeaker on the front panel of the azimuth indicator.

(3) Turn the MEGACYCLE CHANGE switch to the band within which a strong signal of known azimuth can be received. Adjust the KILOCYCLE CHANGE control to the frequency of the strong signal.

(4) Adjust the KILOCYCLE CHANGE and ANT. TRIM controls for maximum indication on the CARRIER LEVEL meter. (Move the goniometer drive bearing indicator scale to avoid the possibility of the scale being set on the signal minimum.) Set the FUNCTION switch to the MGC position. Reduce the RF GAIN control to a point just below receiver overloading.

(5) If the signal is continuous wave, set the BFO switch in the ON position and adjust the BFO PITCH control for a comfortable tone from the loudspeaker. Adjust the LOCAL GAIN control for a comfortable level.

(6) Set the BANDWIDTH control to the position affording the least interference and the best reception. Unlike visual operation, any degree of bandwidth may be used.

d. Df Receiver and Goniometer Drive (figs. 45 and 43). Two methods of null determination are provided by this equipment.

(1) Rotate the goniometer drive bearing indicator scale until minimum loudspeaker volume is obtained. Advance the RF GAIN control near the signal null to improve accuracy.

(2) Rotate the goniometer drive bearing indicator scale for minimum reading on the CARRIER LEVEL meter. Advance the RF GAIN control to insure accurate minimum.

e. Goniometer Drive. Note the azimuth readings obtained on the white and red scales.

f. Azimuth Indicator (fig. 44). Fully depress the SENSE switch. Rotate the goniometer drive bearing indicator scale 90° in one direction and then 90° in the opposite direction. If the signal strength decreases when the goniometer dial is rotated toward an increasing azimuth, read the azimuth at the original null on the white scale. If the signal strength increases when the goniometer is rotated toward an increasing azimuth, read the azimuth at the original null on the red scale.

Notes:

1. If the signal increases as the goniometer drive bearing indicator scale is rotated 90° in either direction, select the weaker reading. If this weaker reading occurs after rotation to an increasing azimuth, the direct bearing at the null is read on the white scale. If the weaker signal occurs after the bearing indicator scale has been rotated towards a decreasing azimuth, the bearing at the null is read on the red scale.

2. When using the high-frequency arrangement of the Adcock antenna and the frequency of the received signal is greater than 6 mc, refer to paragraph 70 for octantal error correction.

3. Sense reversals may occur if the SENSE switch on the signal goniometer is not set for the antenna being used (crossed-loop or Adcock); or the CROSSED LOOPS SENSE PHASE SWITCH on Radio Frequency Amplifier AM–496/TRD–4 is not set to the frequency band that includes the received signal, .54 to 12 mc or 12 to 30 mc, when the crossed-loop antenna is used.

73. General Operating Information

When direction finding on one of two signals of almost identical frequency, the interfering signal can be eliminated by setting the BFO switch on the df receiver to the ON position and adjusting the BFO PITCH control to produce zero beat with the undesired signal. The goniometer drive bearing indicator scale can then be adjusted until the aural-null bearing is obtained on the desired signal (par. 72*d*).

74. Stopping Procedure, Aural-Null Operation (Adcock or Crossed-Loop Antenna)

a. Emergency or Standby Stopping. Set the LINE INPUT switch on Junction Box J–95/CRD–2 in the OFF position (fig. 42).

b. Normal Stopping.

(1) Set the FUNCTION switch on the df receiver in the OFF position.

(2) Set the MAIN POWER switch on the azimuth indicator in the OFF position.

(3) Set the LINE INPUT and OUTPUT LOAD switches on Junction Box J–95B/CRD–2 in the OFF positions.

75. Starting Procedure, Aural-Null Operation (Single-Loop Antenna)
(figs. 45 and 46)

a. Perform the preliminary starting procedures outlined in paragraphs 65 and 66.

b. Perform the starting procedure for visual operation outlined in paragraph 67*a* and *b*.

c. Set the POWER switch on the rf amplifier in the ON position.

d. Set the MAIN POWER switch on the azimuth indicator in the ON position.

Note.—The INDICATOR and GONIO DRIVE switches on the azimuth indicator should be in the OFF positions.

e. Set the FUNCTION switch on the df receiver in the MGC position.

Note.—Allow approximately 15 minutes for the equipment to warm up.

f. Set the RF GAIN and the LOCAL GAIN controls on the df receiver in the five positions. Set the BFO switch in the OFF position.

g. Set the ANT. SELECT. switch on the rf amplifier in the SINGLE LOOP position.

76. Operating Procedure, Aural-Null Operation (Single-Loop Antenna)
(fig. 46)

a. Remove the east-west loop of the crossed-loop antenna (par. 46*a*) and set the controls on the rf amplifier as follows:

(1) Set the BAND SWITCH to the band that includes the desired frequency.

(2) Set the tuning dial to the desired frequency.

b. Set the controls on the df receiver as follows (fig. 45):

(1) Set the MEGACYCLE CHANGE switch to the band that includes the desired frequency.

(2) Set the KILOCYCLE CHANGE control to the desired frequency.

(3) Adjust the ANT. TRIM and KILOCYCLE CHANGE controls for maximum reading on the CARRIER LEVEL meter.

(4) If required to reduce interference, set the BANDWIDTH control to the 2 KC position. When the signal is continuous-wave, turn the BFO switch to the ON position and adjust the BFO PITCH control for a comfortable tone from the loudspeaker on the front panel of the azimuth indicator.

(5) Adjust the LOCAL GAIN control for a comfortable output from the loudspeaker.

c. Obtain the null as follows:

(1) Rotate the hand wheel on the rf amplifier until a null is obtained in the loudspeaker output.

(2) Advance the RF GAIN control on the df receiver near the null point to enhance the accuracy.

(3) At the null point or position of the hand wheel where minimum output from the loudspeaker is obtained, read the bearing on the white scale.

d. Aural-null sensing is performed as follows:

(1) Rotate the hand wheel approximately 90° in the direction of and increasing azimuth.

(2) Press the sense switch on the rf amplifier to the midposition (sense white). Depress the switch all the way down (sense red) and note the position of the switch where minimum output from the loudspeaker is obtained.

e. With the sense switch in the position of the weakest output, adjust the SENSE GAIN control on the rf amplifier to a position of minimum output (between positions 3 and 9). In this range the signal strength of the single-loop signal and the sense signal are as near equal as is possible to achieve with this equipment.

f. If the signal is weaker in the sense white position than in the sense red position, the direct bearing obtained at the null is indicated on the white scale.

g. If the signal on sense white is stronger than on sense red, the direct bearing obtained at the null is read on the red scale.

Example: A null is noted at 10° on the white scale and the hand wheel is turned to 100°. The sense switch is depressed to sense white and then to sense red. If the signal is weakest in the sense white position, the bearing should be read on the white scale (10°). If the signal is weakest in the sense red position, release the sense switch, rotate the hand wheel back to the null position (10° on the white scale), and note the reading on the red scale (190°) which is the correct bearing.

h. If it is desired to monitor a voice signal while taking its bearing, set the BFO switch on the df receiver in the OFF position.

77. Stopping Procedure, Aural-Null Operation (Single-Loop Antenna)

a. Emergency Stopping. Set the LINE INPUT switch on Junction Box J–95B/CRD–2 in the OFF position (fig. 42).

b. Normal Stopping.

(1) Set the POWER switch on the rf amplifier in the OFF position.

(2) Set the FUNCTION switch on the df receiver in the OFF position.

(3) Set the MAIN POWER switch on the azimuth indicator in the OFF position.

(4) Set the LINE INPUT and OUTPUT LOAD switches on the junction box in the OFF positions.

78. Antijamming Operating Instructions

a. It is important that direction finder set operators recognize the difference between intentional jamming and accidental interference. The recognition of the difference is important because the deliberate application of jamming of direction finder sets will generally be used to hide the location of an important enemy position. When the operator realizes that the equipment is being jammed, he should immediately inform his superior officer of this fact. Under no circumstances should he cease operations.

(1) Unintentional interference may result from the operation of near-by radio or radar transmitters or from near-by power generators and other electrical equipment. The interference caused by these sources may appear similar to the effects of enemy jamming and are likely to occur unless preventive measures are taken (par. 31). The operator should, therefore, be familiar with these effects and should be able to minimize them.

(2) There are two primary methods of jamming direction finder sets.

(*a*) The first method involves introducing an error into the bearing indication. This bearing error can be introduced by the simultaneous operation of several transmitters on the same frequency at different locations. When the enemy uses this method of jamming, it will be found that the indicated bearing will be between the bearings of two enemy transmitters. Furthermore, by slowly varying the power radiated from one of these transmitters, the enemy can cause the apparent bearing indication to swing between the bearings of the two transmitters in a manner which is similar to the swinging and fading effects found with variations in polarization.

(*b*) A second method of jamming direction finder set involves confusing the operator by causing additional propellers to appear on the cathode-ray tube presentation or by causing the propeller-shaped pattern to be masked by spurious noise. A variety of methods can generally work through these types of jamming.

b. Any method of jamming that introduces an error into the bearing indication is difficult to recognize. To be reasonably certain that the error is caused by enemy activity rather than natural causes such as propagation conditions or electrical equipment, the operator must be alert to unusual conditions or abrupt changes in indicated azimuth. The direction finder operator will find that with experience, it becomes easier to recognize the various forms of jamming which are designed to confuse him or make it difficult to obtain a bearing on the enemy transmitter. It should be understood that new methods of jamming direction finder equipment will appear as the enemy becomes more adept. For this reason, it is strongly recommended that the operator experiment with the df receiver and azimuth indicator controls in an attempt to overcome the effects of jamming when more conventional techniques fail.

c. To obtain maximum accuracy, the operator will adhere to the following operational procedures:

(1) If the propeller appears normal but oscillates between two bearings, abruptly changes position, or otherwise shifts, it may be caused by two transmitters that operate on the same frequency but at different locations.

The operator should record the bearings with a description of the propeller presentations and report this information to his superior officer. Change from visual to aural-null operation and identify the station or stations.

(2) If more than one propeller is present or the propeller rotates around the screen of the cathode-ray tube and a steady tone is present at the loudspeaker or headphones, the operator should record a description of the phenomenon, notify his superior officer, and:

(*a*) Slowly adjust the KILOCYCLE CHANGE and ANT. TRIM controls on the df receiver to obtain minimum rotation of the propeller-shaped pattern.

(*b*) Set the BANDWIDTH control in either the .1 KC or 1 KC position and again adjust the KILOCYCLE CHANGE and ANT. TRIM controls to obtain minimum rotation of the propeller-shaped pattern.

(*c*) Slowly reduce the RF GAIN control to obtain the best propeller-shaped pattern.

(*d*) If a reasonable accurate bearing is still not obtainable, change to aural-null operation, set the BFO switch in the ON position, and adjust the BFO PITCH control to reduce the tone in the loudspeaker or headphones output.

79. Operation of Intercept and Communication Receivers

a. Radio Receiver R–390/URR, which is used as the df receiver, is also used as an intercept and a communication receiver.

b. Power is supplied to the intercept and communication receivers directly from Junction Box J–95B/CRD–2.

c. The intercept and communication receivers are operated in the same manner as the df receiver. When the intercept receiver picks up a signal, the frequency of the signal can be read on the frequency indicator and transferred to the df receiver.

d. Complete instructions for installing, operating, and maintaining Radio Receiver R–390/URR are contained in TM 11–856.

80. Starting Procedure, Radio Transmitter T–279/UR

a. Fully extend all five sections of the telescopic antenna.

Caution: Failure to extend the antenna to its full height will cause improper operation, resulting in abnormal battery drain.

b. Open the cover on top of the radio transmitter for access to the controls.

c. Turn on the radio transmitter by placing the TRANSMITTER switch on the top panel in the ON position. The INDICATOR light will flash to indicate that the radio transmitter is in operation. If the INDICATOR light does not flash, refer to the equipment performance check list (par. 103).

81. Operation of Radio Transmitter T–279/UR

a. Cw Operation.

(1) Set the MCW-CW switch in the CW position.

(2) Turn the BANDSWITCH switch to the band that includes the desired frequency.

(3) Set the tuning control so that the hairline coincides with the desired frequency on the dial.

Note.—Bands .5–1MC, 1–2MC, and 2–4MC are read on the upper part of the dial, and bands 4–8MC, 8–16MC, and 16–30MC are read on the lower part of the dial.

(4) Turn the OUTPUT control fully clockwise to obtain maximum power output.

b. Mcw Operation. Operate the radio transmitter as described above with the exception that the MCW-CW switch is set in the MCW position.

82. Stopping Procedure, Radio Transmitter T–279/UR

a. Set the TRANSMITTER switch in the OFF position.

b. Telescope the antenna into the case. Close and latch the cover.

Section III. OPERATION UNDER UNUSUAL CONDITIONS

83. General

The operation of Direction Finder Set AN/TRD–4A may be difficult in regions where extreme heat, humidity and moisture, sand conditions, etc., prevail. Instructions are given in paragraphs 84, 85, and 86 on procedures for minimizing the effect of these unusual operating conditions.

84. Operation in Arctic Climates

Subzero temperatures and climatic conditions associated with cold weather affect the efficient operation of the equipment. Instructions and precautions for operation under such adverse conditions follow.

a. Keep the equipment warm and dry. Stow the radio transmitter in the heated shelter until it is to be used.

b. Improvise any means for preventing the radio transmitter batteries from freezing. To prevent heat loss when the radio transmitter is carried outside, place the radio transmitter in a bag lined with kapok, spun glass, fiber materials, animal skins, or woolen cloth.

c. When the equipment has been exposed to the cold and is brought into a warm shelter, it will sweat until it reaches room temperature. When the equipment has reached room temperature, dry it thoroughly. This condition also arises when equipment warms up during the day after exposure during a cold night.

d. The GONIO DRIVE-COLD START switch on the front panel of the goniometer drive is pressed to increase the starting torque of the goniometer drive motor in cold weather.

85. Operation in Tropical Climates

a. High relative humidity causes condensation of moisture on the equipment whenever the temperature of the equipment becomes lower than that of the ambient air. To minimize this condition, place a lighted electric bulb under each equipment and keep the forced ventilation operating in the shelter.

b. Under conditions of extreme humidity, the indicator light on Radio Transmitter T–279/UR may stop blinking or the interval between successive blinks may be excessively increased. This is not to be taken as an indication that the radio transmitter has ceased to function. Dry out the radio transmitter before making any repairs or replacing the batteries.

86. Operation in Desert Climates

a. Conditions similar to those encountered in tropical climates often prevail in desert areas. Use the same measures to insure proper operation of the equipment.

b. The main problem with equipment operation in desert areas is the large amount of sand or dust and dirt that enters the moving parts of the equipment. The best precaution is to make the shelter in which the equipment is located as dustproof as possible with available materials. Hang wet sacking over the windows and doors and cover the inside walls with heavy paper.

c. Be sure to keep the equipment as free from dust as possible by keeping the cabinets closed. Make frequent preventive maintenance checks (par. 92).

d. Sudden wind squalls, to which desert areas are subject, necessitate the use of extreme caution regarding the security of the counterpoise, the guys of the Adcock antenna, and the lines and cables outside the shelter.

CHAPTER 4

ORGANIZATIONAL MAINTENANCE

Section I. ORGANIZATIONAL TOOLS AND EQUIPMENT

87. General

The tools and materials supplied with Direction Finder Set AN/TRD–4A are listed in paragraph 88. The allowable maintenance that can be performed by the using organization depends to a large extent on the existing military regulations, the tactical situation, and on the other tools and test equipment issued to the using organization.

88. Tools and Materials Supplied with Direction Finder Set AN/TRD–4A

The tools and materials supplied with Direction Finder Set AN/TRD–4A are listed below.

Note. The items listed in *a* and *b* below are also listed in the table of components (par. 10).

a. Antenna.
- Antenna layout template chain.
- Rod level.
- Hammer.
- Plumb bob, compass, and tripod.
- 50-foot steel tape.

b. Shelter.
- 2 wrenches ½-inch.
- 1 screwdriver.

c. Azimuth Indicator.
- 1 alinement tool.
- 1 tube extractor.
- 1 bottle antistatic wax, 1-oz.

d. Radio Receivers.
- 2 tube pullers.
- 2 pin straighteners.
- 1 screwdriver.
- 1 fluted socket wrench.

e. Junction Box.
- 1 set Allen wrenches.

f. Rf Amplifier.
- 1 screwdriver, ⅛-inch diameter.
- 1 test cable.
- 1 tube extractor.

Section II. PREVENTIVE MAINTENANCE

89. Definition of Preventive Maintenance

Preventive maintenance is work performed on equipment (usually when the equipment is not in use) to keep it in good working order so that breakdowns and needless interruptions in service will be kept to a minimum. Preventive maintenance differs from trouble shooting and repair since its object is to prevent certain troubles from occurring.

90. General Preventive Maintenance Techniques

a. Use No. 000 sandpaper to remove corrosion.

b. Use a clean, dry, lint-free cloth or a dry brush for cleaning.

(1) If necessary, except for electrical contacts, moisten the cloth or brush with solvent, dry cleaning (SD); after cleaning, wipe parts dry with a cloth.

(2) Clean electrical contacts with a cloth moistened with carbon tetrachloride; then wipe them dry with a dry cloth.

Caution: Repeated contact of carbon tetrachloride with the skin or prolonged breathing of the fumes is dangerous. Make sure adequate ventilation is provided.

c. If available, dry compressed air may be used at a line pressure not exceeding 60 pounds per square inch to remove dust from inacces-

sible places; be careful however, or mechanical damage from the air blast may result.

d. Inspect for faults that are just beginning to show and take remedial action.

(1) Locate and tighten loose mechanical parts.

(2) Locate and insulate frayed cables and wires.

(3) Locate parts which appear ready to fail (scorched resistors) and notify field maintenance personnel.

e. For further information on preventive maintenance techniques, refer to TB SIG 178, Preventive Maintenance Guide for Radio Communication Equipment.

91. Use of Preventive Maintenance Forms (figs. 51 and 52)

a. The decision as to which items on DA Forms 11–238 and 11–239 are applicable to this equipment is a tactical decision to be made in the case of first echelon maintenance by the communication officer/chief or his designated representative, and in the case of second and third echelon maintenance, by the individual making the inspection. Instructions for the use of each form appear on the reverse side of the form.

b. Circled items in figures 51 and 52 are partially or totally applicable to Direction Finder Set AN/TRD–4A. References in the ITEM block are to paragraphs in the text which contain additional maintenance information.

92. Performing Preventive Maintenance

a. Performing Exterior Preventive Maintenance.

Caution: Tighten screws, bolts, and nuts carefully. Fittings tightened beyond the pressures for which they are designed will be damaged or broken.

(1) Check to see that trucks or large metal objects are as far as possible from the antenna, and in no case, any closer than 170 feet from the antenna.

(2) Inspect the antennas, antenna bases, and exterior metal surfaces for rust and corrosion.

(3) Inspect the cords and cables for cuts, breaks, fraying, kinks, bruises, strains, or deterioration. Cables evidencing any of the above should be replaced.

(4) Check the level of each Adcock antenna mast (par. 39*p*). Check the Adcock antenna masts for proper alinement (par. 39*t*). Straighten or replace any bent mast sections or antenna loading disks. Inspect the antenna couplers for moisture. Tighten any loose couplings and antenna loading disks. Check the counterpoise ground straps for tightness of connections and remove any corrosion with sandpaper or emery cloth.

Caution: Do not use steel wool. It leaves particles which rust.

(5) Inspect the shelter for adequacy of weatherproofing.

(6) Check the tension and general condition of guys used to stay the mast.

(7) With an ohmmeter, check the two resistors in the antenna coupler of each Adcock antenna (fig. 69). The resistance between the Radio Frequency Connector UG–58A/U center pin and the connector base (ground) is 500 ohms. The resistance between the connector center pin and the top plate antenna connection is 200 ohms. Resistance of similar resistors in all four masts match within 1 percent.

b. Performing Interior Preventive Maintenance.

(1) Remove dirt and moisture from the headset, key, jacks, plugs, table, and panels of the components.

(2) Inspect the seating of all plugs and connectors.

(3) Inspect all controls for binding, scraping, excessive looseness, misalinement, and positive action.

(4) Inspect for normal operation. Refer to equipment performance checklists (pars. 101–103).

(5) Check all ground connections to the operating table and to the floor for tightness. Check all bolts that secure the operating table to the floor and the equipment to the table for tightness.

Caution: Disconnect all power before performing the following operations. Upon completion, reconnect power and check for satisfactory operation.

OPERATOR FIRST ECHELON MAINTENANCE CHECK LIST FOR SIGNAL CORPS EQUIPMENT

RADIO COMMUNICATION, DIRECTION FINDING, CARRIER, RADAR

INSTRUCTIONS: See other side

EQUIPMENT NOMENCLATURE	EQUIPMENT SERIAL NO.

LEGEND FOR MARKING CONDITIONS: ✓ Satisfactory; X Adjustment, repair or replacement required; (X) Defect corrected.
NOTE: Strike out items not applicable.

DAILY

NO	ITEM	CONDITION S	M	T	W	T	F	S
1	COMPLETENESS AND GENERAL CONDITION OF EQUIPMENT *(receiver, transmitter, carrying cases, wire and cable, microphones, tubes, spare parts, technical manuals and accessories).*							
2	LOCATION AND INSTALLATION SUITABLE FOR NORMAL OPERATION. PAR. 92 a(1)							
3	CLEAN DIRT AND MOISTURE FROM ANTENNA, MICROPHONE, HEADSETS, CHESTSETS, KEYS, JACKS, PLUGS, TELEPHONES, CARRYING BAGS, COMPONENT PANELS. PAR. 92 b(1)							
4	INSPECT SEATING OF READILY ACCESSIBLE "PLUCK-OUT" ITEMS: TUBES, LAMPS, CRYSTALS, FUSES, CONNECTORS, VIBRATORS, PLUG-IN COILS AND RESISTORS. PAR. 92 b(2)							
5	INSPECT CONTROLS FOR BINDING, SCRAPING, EXCESSIVE LOOSENESS, WORN OR CHIPPED GEARS, MISALIGNMENT, POSITIVE ACTION. PAR. 92 b(3)							
6	CHECK FOR NORMAL OPERATION. PAR. 92 b(4)							

WEEKLY

NO.	ITEM	CONDITION	NO.	ITEM	CONDITION
7	CLEAN AND TIGHTEN EXTERIOR OF COMPONENTS AND CASES, RACK MOUNTS, SHOCK MOUNTS, ANTENNA MOUNTS, COAXIAL TRANSMISSION LINES, WAVE GUIDES, AND CABLE CONNECTIONS. PAR. 92 b(5)		13	INSPECT STORAGE BATTERIES FOR DIRT, LOOSE TERMINALS, ELECTROLYTE LEVEL AND SPECIFIC GRAVITY, AND DAMAGED CASES.	
8	INSPECT CASES, MOUNTINGS, ANTENNAS, TOWERS, AND EXPOSED METAL SURFACES, FOR RUST, CORROSION, AND MOISTURE.		14	CLEAN AIR FILTERS, BRASS NAME PLATES, DIAL AND METER WINDOWS, JEWEL ASSEMBLIES.	
9	INSPECT CORD, CABLE, WIRE, AND SHOCK MOUNTS FOR CUTS, BREAKS, FRAYING, DETERIORATION, KINKS, AND STRAIN. PAR. 92 a(3)		15	INSPECT METERS FOR DAMAGED GLASS AND CASES.	
10	INSPECT ANTENNA FOR ECCENTRICITIES, CORROSION, LOOSE FIT, DAMAGED INSULATORS AND REFLECTORS. PAR. 92 a(2)		16	INSPECT SHELTERS AND COVERS FOR ADEQUACY OF WEATHERPROOFING. PAR. 92 a(5)	
11	INSPECT CANVAS ITEMS, LEATHER, AND CABLING FOR MILDEW, TEARS, AND FRAYING.		17	CHECK ANTENNA GUY WIRES FOR LOOSENESS AND PROPER TENSION. PAR. 92 a(6)	
12	INSPECT FOR LOOSENESS OF ACCESSIBLE ITEMS: SWITCHES, KNOBS, JACKS, CONNECTORS, ELECTRICAL TRANSFORMERS, POWERSTATS, RELAYS, SELSYNS, MOTORS, BLOWERS, CAPACITORS, GENERATORS, AND PILOT LIGHT ASSEMBLIES.		18	CHECK TERMINAL BOX COVERS FOR CRACKS, LEAKS, DAMAGED GASKETS, DIRT AND GREASE.	

19 IF DEFICIENCIES NOTED ARE NOT CORRECTED DURING INSPECTION, INDICATE ACTION TAKEN FOR CORRECTION.

DA FORM 1 MAY 51 11-238 REPLACES DA FORM 419, 1 DEC 50, WHICH IS OBSOLETE.

TM688-143

Figure 51. DA Form 11-238.

SECOND AND THIRD ECHELON MAINTENANCE CHECK LIST FOR SIGNAL CORPS EQUIPMENT

RADIO COMMUNICATION, DIRECTION FINDING, CARRIER, RADAR

INSTRUCTIONS: See other side

EQUIPMENT NOMENCLATURE	EQUIPMENT SERIAL NO.

LEGEND FOR MARKING CONDITIONS: ✓ Satisfactory; X Adjustment, repair or replacement required; (X) Defect corrected.
NOTE: Strike out items not applicable.

NO.	ITEM	CONDITION	NO.	ITEM	CONDITION
1	COMPLETENESS AND GENERAL CONDITION OF EQUIPMENT *(receiver, transmitter, carrying cases, wire and cable, microphones, tubes, spare parts, technical manuals and accessories).*		19	ELECTRON TUBES - INSPECT FOR LOOSE ENVELOPES, CAP CONNECTORS, CRACKED SOCKETS: INSUFFICIENT SOCKET SPRING TENSION; CLEAN DUST AND DIRT CAREFULLY; CHECK EMISSION OF RECEIVER TYPE TUBES. PAR. 92 b(6)	
2	LOCATION AND INSTALLATION SUITABLE FOR NORMAL OPERATION. PAR. 92 a(1)		20	INSPECT FILM CUT-OUTS FOR LOOSE PARTS, DIRT, MISALIGNMENT AND CORROSION.	
3	CLEAN DIRT AND MOISTURE FROM ANTENNA, MICROPHONE, HEADSETS, CHESTSETS, KEYS, JACKS, PLUGS, TELEPHONES, CARRYING BAGS, COMPONENT PANELS. PAR. 92 b(1)		21	INSPECT FIXED CAPACITORS FOR LEAKS, BULGES, AND DISCOLORATION. PAR. 92 b(7)	
4	INSPECT SEATING OF READILY ACCESSIBLE "PLUCK-OUT" ITEMS: TUBES, LAMPS, CRYSTALS, FUSES, CONNECTORS, VIBRATORS, PLUG-IN COILS AND RESISTORS. PAR. 92 b(2)		22	INSPECT RELAY AND CIRCUIT BREAKER ASSEMBLIES FOR LOOSE MOUNTINGS; BURNED, PITTED, CORRODED CONTACTS; MISALIGNMENT OF CONTACTS AND SPRINGS; INSUFFICIENT SPRING TENSION; BINDING OF PLUNGERS AND HINGE PARTS. PAR. 92 b(8)	
5	INSPECT CONTROLS FOR BINDING, SCRAPING, EXCESSIVE LOOSENESS, WORN OR CHIPPED GEARS, MISALIGNMENT, POSITIVE ACTION. PAR. 92 b(3)		23	INSPECT VARIABLE CAPACITORS FOR DIRT, MOISTURE, MISALIGNMENT OF PLATES, AND LOOSE MOUNTINGS. PAR. 92 b(9)	
6	CHECK FOR NORMAL OPERATION. PAR. 92 b(4)		24	INSPECT RESISTORS, BUSHINGS, AND INSULATORS, FOR CRACKS, CHIPPING, BLISTERING, DISCOLORATION AND MOISTURE. PAR. 92 b(10)	
7	CLEAN AND TIGHTEN EXTERIOR OF COMPONENTS AND CASES, RACK MOUNTS, SHOCK MOUNTS, ANTENNA MOUNTS, COAXIAL TRANSMISSION LINES, WAVE GUIDES, AND CABLE CONNECTIONS. PAR. 92 b(5)		25	INSPECT TERMINALS OF LARGE FIXED CAPACITORS AND RESISTORS FOR CORROSION, DIRT AND LOOSE CONTACTS. PAR. 92 b(11)	
8	INSPECT CASES, MOUNTINGS, ANTENNAS, TOWERS, AND EXPOSED METAL SURFACES, FOR RUST, CORROSION, AND MOISTURE.		26	CLEAN AND TIGHTEN SWITCHES, TERMINAL BLOCKS, BLOWERS, RELAY CASES, AND INTERIORS OF CHASSIS AND CABINETS NOT READILY ACCESSIBLE. PAR. 92 b(12)	
9	INSPECT CORD, CABLE, WIRE, AND SHOCK MOUNTS FOR CUTS, BREAKS, FRAYING, DETERIORATION, KINKS, AND STRAIN. PAR. 92 a(3)		27	INSPECT TERMINAL BLOCKS FOR LOOSE CONNECTIONS, CRACKS AND BREAKS. PAR. 92 b(13)	
10	INSPECT ANTENNA FOR ECCENTRICITIES, CORROSION, LOOSE FIT, DAMAGED INSULATORS AND REFLECTORS. PAR 92 a(2)		28	CHECK SETTINGS OF ADJUSTABLE RELAYS.	
11	INSPECT CANVAS ITEMS, LEATHER, AND CABLING FOR MILDEW, TEARS, AND FRAYING.		29	LUBRICATE EQUIPMENT IN ACCORDANCE WITH APPLICABLE DEPARTMENT OF THE ARMY LUBRICATION ORDER.	
12	INSPECT FOR LOOSENESS OF ACCESSIBLE ITEMS: SWITCHES, KNOBS, JACKS, CONNECTORS, ELECTRICAL TRANSFORMERS, POWERSTATS, RELAYS, SELSYNS, MOTORS, BLOWERS, CAPACITORS, GENERATORS, AND PILOT LIGHT ASSEMBLIES.		30	INSPECT GENERATORS, AMPLIDYNES, DYNAMOTORS, FOR BRUSH WEAR, SPRING TENSION, ARCING, AND FITTING OF COMMUTATOR. PAR. 92 b(14)	
13	INSPECT STORAGE BATTERIES FOR DIRT, LOOSE TERMINALS, ELECTROLYTE LEVEL AND SPECIFIC GRAVITY, AND DAMAGED CASES.		31	CLEAN AND TIGHTEN CONNECTIONS AND MOUNTINGS FOR TRANSFORMERS, CHOKES, POTENTIOMETERS, AND RHEOSTATS. PAR. 92 b(15)	
14	CLEAN AIR FILTERS, BRASS NAME PLATES, DIAL AND METER WINDOWS, JEWEL ASSEMBLIES.		32	INSPECT TRANSFORMERS, CHOKES, POTENTIOMETERS, AND RHEOSTATS FOR OVERHEATING AND OIL-LEAKAGE. PAR. 92 b(16)	
15	INSPECT METERS FOR DAMAGED GLASS AND CASES.		33	BEFORE SHIPPING OR STORING - REMOVE BATTERIES. PAR. 92 b(17)	
16	INSPECT SHELTERS AND COVERS FOR ADEQUACY OF WEATHERPROOFING. PAR. 92 a(5)		34	INSPECT CATHODE RAY TUBES FOR BURNT SCREEN SPOTS. PAR. 92 b(18)	
17	CHECK ANTENNA GUY WIRES FOR LOOSENESS AND PROPER TENSION. PAR. 92 a(6)		35	INSPECT BATTERIES FOR SHORTS AND DEAD CELLS. PAR. 92 b(19)	
18	CHECK TERMINAL BOX COVERS FOR CRACKS, LEAKS, DAMAGED GASKETS, DIRT AND GREASE.		36	INSPECT FOR LEAKING WATERPROOF GASKETS, WORN OR LOOSE PARTS.	
			37	MOISTURE AND FUNGIPROOF. PAR. 92 b(20)	
38	IF DEFICIENCIES NOTED ARE NOT CORRECTED DURING INSPECTION, INDICATE ACTION TAKEN FOR CORRECTION.				

DA FORM 1 MAY 51 11-239 REPLACES DA FORM 419, 1 DEC 50, WHICH IS OBSOLETE. 68—16—64382-1

TM688-144

Figure 52. DA Form 11-239.

(6) Inspect the electron tubes for loose envelopes, cap connectors, cracked sockets, and insufficient socket spring tension; remove dust and dirt. Check the emission of the receiver-type tubes.

(7) Inspect oil-filled capacitors (CP type with metal case) for leaks, bulges, and discoloration.

(8) Inspect the goniometer relay and circuit breaker assemblies for loose mountings, burned, pitted, or corroded contacts, misalinement of contacts and springs, insufficient spring tension, and binding of hinged parts.

(9) Inspect the variable capacitors for dirt, moisture, misalinement of plates, and loose mountings.

(10) Inspect the resistors, bushings, and insulators for cracks, chippings, blistering, discoloration, and moisture.

(11) Inspect the terminals of large fixed capacitors and resistors for corrosion, dirt, and loose contacts.

(12) Clean the wafer switch contacts, interiors of chassis, and cabinets not readily accessible.

(13) Inspect the terminal blocks for loose connections, cracks, and breaks.

(14) Inspect the goniometers and drive motor. Check to see if the shaft turns freely.

(15) Clean the connections and tighten the mountings for transformers, chokes, potentiometers, and rheostats.

(16) Inspect the transformers, chokes, potentiometers, and rheostats for overheating and oil leakage.

(17) Before shipping or storage, remove the batteries from the radio transmitter.

(18) Inspect the cathode-ray tube for burned screen spots.

(19) Check the radio transmitter batteries. If the batteries are more than 10 percent below the rated voltage, they should be replaced.

(20) Check the condition of the moisture-fungiproof coating.

(21) Check the tightness of the goniometer drive belt. If necessary, loosen the four mounting screws and slide the drive motor back to tighten the belt. Retighten the screws (par. 201*a*(5)).

(22) Check the condition of the loop antenna slip rings (fig. 110).
Clean them if necessary with a soft cloth. Do not use sandpaper or an emery cloth.

c. Ventilation of Shelter. When the shelter is sited in a damp location or the equipment is not operated for 7 days or longer, the shelter should be ventilated periodically to prevent moisture from condensing on the equipment. Occasional operation of the blower motor and heater will be helpful.

Section III. LUBRICATION AND WEATHERPROOFING

93. Lubrication

No periodic lubrication is required for Direction Finder Set AN/TRD–4A. Parts are lubricated at the factory and require no further lubrication during the life of the equipment. Grease, Aircraft and Instruments (GL), is good for all operating conditions, including operation in arctic and tropical regions.

94. Weatherproofing

a. General. Signal Corps equipment, when operated under severe climatic conditions such as prevail in tropical, arctic, and desert regions, requires special treatment and maintenance. Fungus growth, insects, dust, corrosion, salt spray, excessive moisture, and extreme temperatures are harmful to most materials.

b. Tropical Maintenance. A special moisture-fungiproofing treatment has been applied to provide a reasonable degree of protection during the life of the equipment.

c. Arctic Maintenance. Special precautions necessary to prevent poor performance or total operation failure of equipment in extremely low temperatures are fully explained in TB SIG 66, Winter Maintenance of Signal Equipment, and TB SIG 219, Operation of Signal, Equipment of Low Temperatures.

d. Desert Maintenance. Special precautions necessary to prevent equipment failure in areas

subject to extremely high temperatures, low humidity, and excessive sand and dust are fully explained in TB SIG 75, Desert Maintenance of Ground Signal Equipment.

95. Rustproofing and Painting

a. When the finish on a case has been badly scarred or damaged, rust and corrosion can be prevented by touching up the bared surfaces. Use No. 00 or No. 000 sandpaper to clean the surface down to the bare metal; obtain a bright smooth finish.

Caution: Do not use steel wool. Minute particles frequently enter the case and cause harmful internal shorting or grounding of circuits.

b. Apply paint with a small brush. Use lusterless olive drab enamel (US Army specification 72–53, table I, type I) for the equipment used outside the shelter, and gray enamel (Federal Specification TT–C–595, shade 2610) for all other equipment used inside the shelter.

Section IV. TROUBLESHOOTING AT ORGANIZATIONAL LEVEL

96. Extent of Instructions

a. The troubleshooting and repair work that can be performed at organizational maintenance level (operators and repairmen) is necessarily limited in scope by the tools, test equipment, and replaceable parts issued and by the existing tactical situation. Accordingly, troubleshooting is based on the performance of the equipment and the use of the senses in determining such troubles as burned tubes, cracked insulators, etc.

b. Paragraphs 97 through 103 are helpful in determining which component, such as the goniometer or azimuth indicator, is at fault and are helpful in localizing the fault in that component to the defective stage or item, such as a tube or fuse.

97. Visual Inspection

a. Failure of this equipment to operate properly will usually be caused by one or more of the following faults:

(1) Improperly connected cords or cables, high resistance connections in electrical connections subject to weathering.
(2) Worn, broken, or disconnected cords, plugs, or receptacles.
(3) Burned-out fuses.
(4) Defective tubes.
(5) Dead batteries (radio transmitter only).
(6) Disconnected battery plugs (radio transmitter only).
(7) Connections broken by rough handling or dropping of the equipment.
(8) Antenna not fully extended which prevent clamps from making contact with the antenna (radio transmitter only).

b. If possible, obtain information from the operator of the equipment regarding its performance at the time trouble occurred.

98. Tube Access, Location, and Substitution

a. Azimuth Indicator (9, fig. 19). Loosen the four captive screws on the front panel of the azimuth indicator (fig. 16), and pull the unit as far forward as possible. The location of the tubes in the azimuth indicator is shown in figure 102.

b. Df, Communication, and Intercept Receivers (19, 18, and 23, fig. 19). Remove the four captive bolts on each side of the receiver front panel and pull the receiver as far forward as possible. The location of the tubes in the receivers is shown in TM 11–856.

c. Rf Amplifier (2, fig. 20). The rf amplifier contains three tubes. Tube V203 is located at the rear of the unit (fig. 112) and is easily removed. Tubes V201 and V202 are located on the door chassis (fig. 109) and are removed as follows:

(1) Remove cable W205 from J205.
(2) Loosen the two wing bolts located to the left of the tuning dial.
(3) Open the door enough to remove plugs P202 and P203 from J206 and J207 located on the rear of the door chassis (46 and 49, fig. 137).
(4) Open the door fully.
(5) Remove the 11 screws that hold the rear cover plate on the door chassis and remove the cover plate.
(6) Twist the tube shield counterclockwise and remove the tube shield through

the hole in the bottom of the door chassis.

(7) Use the tube extractor (fig. 112) to remove the tube through the hole in the bottom of the door chassis.

(8) Reverse the removal procedure to replace the tube.

d. Radio Transmitter. The location of the tubes in the radio transmitter is shown in figure 117. To replace the tubes, the chassis must be removed from the case as follows:

(1) Set the TRANSMITTER switch in the OFF position.

(2) Turn the radio transmitter on its side and unscrew the four knurled hold-down screws (fig. 18) on the bottom of the case.

(3) Pull the chassis assembly out of the case.

e. Tube Substitution. A preferred-type electron tube, type 5RYWGA, has been developed as a direct replacement for tube type 5R4WGY. These tubes may be used interchangeably as rectifier V305 in the azimuth indicator. The older type tube should be used until stocks are exhausted. The following tube substitutions may be made as an emergency measure.

Tube	Substitute tube
Azimuth indicator:	
1Z2	None
5CP1B	5CP1A or 5CP11A
5R4WGY	5R4GY
6005/6AQ5W	6AQ5
6AS7G	None
5749	6BA6
5750	6BE6
5693	6SJ7
0B2	None
Radio transmitter:	
1R5	None
3A4	None
3A5	None
Rf amplifier:	
6AU6	6AH6 or 6BD6
6X4W	6X4

99. System Sectionalization of Trouble to Component

System sectionalization consists of determining whether the trouble is in the antenna, goniometer drive, azimuth indicator, df receiver, or power source. Since the output of the equipment is in terms of both picture and sound information, sectionalization is simplified. For example, if the antenna, signal goniometer, or df receiver (from the antenna input to the IF OUTPUT jack) fails, there will be no sound or picture for these units are common to picture and sound signals. If the audio stage of the df receiver or the loudspeaker fails, there will be no sound but the picture will be undisturbed. Similarly, trouble in the azimuth indicator stages or in the indicator goniometer does not interfere with the sound.

a. Operate the equipment and observe its performance. Refer to the equipment performance checklist (par. 101) for normal operating indications.

b. If the entire direction finder set is dead, the trouble undoubtedly is in the generator set, switch box, junction box, or terminal box.

c. If only one component is dead, the trouble is either in that component or in the power cable to that component. If the trouble is in the component, it is probably a fuse or a tube. Always check the tubes and fuses at an early stage in troubleshooting.

d. If a component is inoperative but the dial lights operate, inspect all the tubes to see that they are lighted or warm. Check the cable for loose connections. Inspect for any tubes with a blue glow and replace.

Note.—Both the type OB–2 (V308) in the azimuth indicator and the type 5651 tubes (V608 and V609) in the receivers are gas-filled tubes and normally will have a blue glow.

e. Intermittent operation caused by an intermittent connection may sometimes be found by tapping sharply each part and by observing the visual pattern or sound.

f. Large bearing errors will result in visual operation when using a receiver selectivity other than 2KC, or when the antenna is not set up properly, and is not perfectly symmetrical in every respect or when the cables are damaged or crushed. Octantal errors, however, are inherent with this system. Refer to figure 50 for corrections.

g. A circular pattern results when there is no if. signal. The trouble may be in the antenna connections, signal goniometer or its connection to the df receiver, in the df receiver or its connections to the azimuth indicator, or in the azimuth indicator.

h. A single line pattern that is fixed and steady is displayed when the goniometer rotors

are not turning. Check the drive motor and the cable and connections that supply power to the goniometer drive.

i. A single line pattern that lengthens from a dot to a line and back again in the same direction when the goniometer drive is turned manually results when one set of deflection plates in the cathode-ray tube does not receive a signal. The trouble may be in the azimuth indicator deflection transformers or the sense switch or in the indicator goniometer or its connections.

j. Inability to obtain a sense signal may be caused by an inoperative sense relay in the signal goniometer or a defective sense switch in the azimuth indicator.

k. No sound in the loudspeaker would normally be considered a df receiver defect but may also be caused by poor connection to the loudspeaker, located in the azimuth indicator. Headphones may be plugged into the df receiver as a check.

l. If the dial lights operate in the azimuth indicator and the cathode-ray tube is dark, the trouble is likely to be the high-voltage power supply of the azimuth indicator, poor connections to the cathode-ray tube, or a defective cathode-ray tube.

100. Troubleshooting by Using Equipment Performance Checklist

a. General. The equipment performance checklist (pars. 101–103) will help the operator to locate trouble in the equipment. The list gives the item to be checked, the conditions under which the item is checked, the normal indications and tolerances of correct operation, and the corrective measures the operator can take. *To use this list, follow the items in numerical sequence.*

b. Action or Condition. For some items, the information given in the *Action or condition* column consists of various switch and control settings under which the item is to be checked. For other items, the information represents an action that must be taken to check the normal indiactions given in the *Normal indications* column.

c. Normal Indications. The normal indications listed include the visible and audible signal that the operator should perceive when checking the items. If the indications are not normal, the operator should apply the recommended corrective measures.

d. Corrective Measures. The corrective measures listed are those the operator can take without turning in the equipment for repairs. A reference in the table to paragraphs in chapter 6 indicates that the trouble cannot be corrected during operation and that troubleshooting by an experienced repairman is necessary. If the set is completely inoperative or if the recommended corrective measures do not yield results, troubleshooting is necessary. However, if the tactical situation requires that communication be maintained and if the set is not completely inoperative, the operator must maintain the set in operation as long as it is poossible to do so. If the recommended corrective measures refer to the receiver, check TM 11–856.

Notes.—The performance checklist is separated into three lists.

1. Goniometer drive, azimuth indicator, df receiver (visual operation).
2. R.F. amplifier and Df receiver (aural-null operation).
3. Radio transmitter.

	No.	Item	Action or condition	Normal indications	Corrective measures
PREPARATORY	1	Switch box selector switch.	Set to correct power source.	None.	
	2	Junction box OUTPUT LOAD switch.	Set to OFF	None.	
	3	Junction box LINE INPUT switch.	Set to OFF	None.	
	4	Junction box OUTPUT VOLTAGE CONTROL.	Set to 1	None.	
	5	Junction box OUTPUT LOAD switch.	Set to DUMMY	None.	

	No.	Item	Action or condition	Normal indications	Corrective measures
START	6	Df receiver FUNCTION switch.	Set to STAND BY	None.	
	7	Junction box LINE INPUT switch.	Set to 115 V. position	*a.* OUTPUT VOLTAGE meter will indicate less than 115 volts.	*a.* If no reading is obtained, depress 115 V. circuit breaker on junction box. If reading still is not obtained, check shelter lights. If shelter lights do not light, check to see that switch box is set to correct power source; check output of switch box. If switch box is set to correct power source and there is no output from switch box, refer to paragraph 194*b*. If shelter lights light, check cable W1001 from terminal box to P902 on junction box, and refer to junction box troubleshooting chart (par. 194*c*).
				b. LINE FREQUENCY will indicate approximately 60 cps.	*b.* If LINE FREQUENCY meter shows no reading while OUTPUT voltage meter does, check frequency output of mobile power unit on power unit FREQUENCY METER. Governor controls engine speed and frequency of ac generator. *Note.* Operation of Direction Finder Set AN/TRD-4A from an ac power source that has a frequency less than 47 cps may cause damage to equipment or impair its operating efficiency.
				c. Meter readings should not fluctuate.	*c.* If readings are obtained on both meters but pointer of LINE VOLTAGE meter fluctuates, check power source for fluctuations.
	8	Junction box OUTPUT VOLTAGE CONTROL.	Rotate clockwise until OUTPUT VOLTAGE meter indicates approximately 115 volts.	OUTPUT VOLTAGE meter indicates 115 volts.	If meter reading does not increase to 115 volts, check ac power source for low input voltage. If power source is normal, refer to junction box troubleshooting chart (par. 194*c*). If power unit is used and engine runs but ac voltage does not build up, check regulator.
	9	Junction box OUTPUT LOAD switch.	Set to EQUIPMENT	Possible slight change in voltage.	None.
	10	Azimuth indicator MAIN POWER switch.	Set to ON	*a.* Dial lights on df receiver will light.	*a.* If dial lights on df receiver do not light, check AC 3A fuse on rear of df receiver chassis. If fuse is not blown, check power cord and connectors. If cord and connectors are normal, check dial lights E 101 and E 102.

	No.	Item	Action or condition	Normal indications	Corrective measures
				b. If INDICATOR switch on azimuth indicator, and POWER switch on rf amplifier are OFF, there will be no other indication.	*b.* None.
START	11	Azimuth indicator INDICATOR switch.	Set to ON	Alidade and goniometer drive bearing indicator scale, lights and indicator tubes should light.	If no illumination results, check fuse F302 on right side of chassis. If fuse is not blown, refer to azimuth indicator troubleshooting chart (par. 181). If only the goniometer drive azimuth scale does not light, check cable W701.
EQUIPMENT PERFORMANCE	12	Azimuth indicator GONIO DRIVE switch.	Set to ON	Goniometer drive motor, azimuth scale, and goniometer rotors should rotate at approximately 1,620 (revolutions per min.) rpm.	If goniometer drive azimuth scale does not rotate, note if scale lights on drive are lighted. If so, check F301 in azimuth indicator (motor fuse). Secondly, check cables and connections to capacitor C701 on goniometer drive chassis. Refer to goniometer drive troubleshooting chart (par. 173).
	13	SIZE control	Set to midpoint	None	None.
	14	INTENSITY control	Adjust for desired brightness.	A solid or filled in pattern will form.	If no illumination is noted on cathode-ray tube, check to see if filament of V310 is lighted. Substitute new tube and if it does not operate, check voltage regulator V308 for illumination that will indicate functioning of 275-volt supply. If V308 is not lighted, check V305 (par. 98*e*), V306 and V307. If V308 is lighted check V309. If all tubes are good, check other components and connections in high-voltage power supply. If high-voltage power supply is normal, check connections to cathode-ray tube and finally replace cathode-ray tube (par. 206*c*). If trouble prevails, refer to azimuth indicator troubleshooting chart (par. 181). ***Warning:*** Potentials up to -2,000 volts are used in this equipment.
	15	FOCUS control	Adjust for a sharp pattern.	Sharply defined pattern will be obtained.	If pattern cannot be sharply defined, check potentiometer R333. If normal, troubleshooting is necessary. Refer to azimuth indicator troubleshooting chart (par. 181).

EQUIPMENT PERFORMANCE

No.	Item	Action or condition	Normal indications	Corrective measures
16	SHAPE control	Adjust until a circular pattern is obtained.	Shape of pattern will change to circular. Pattern should be stationary.	If shape of pattern does not change to circular, check potentiometer R320. If normal, troubleshooting is necessary. Refer to azimuth indicator troubleshooting chart (par. 181).
17	SIZE control	Adjust until pattern changes to a dot.	Size of pattern will change to a small dot.	When pattern size does not change, check potentiometer R313.
18	HORIZONTAL and VERTICAL centering controls.	Adjust until spot illumination is centered on screen.	Spot of illumination will move vertically as VERTICAL control is rotated. Spot of illumination will move horizontally as HORIZONTAL control is rotated.	If adjustment fails to center spot of illumination on screen, check potentiometers R325 and R326. If trouble prevails, troubleshooting is necessary. Refer to azimuth indicator troubleshooting chart (par. 181).
19	SIZE control	Increase size of dot to a circle about 4 inches in diameter.	Size of pattern will change.	Same as corrective measures for item 17.
20	Df receiver FUNCTION switch.	Set to AGC	If df receiver is tuned to a signal, pattern changes from circle to propeller.	If operating on crossed-loop antenna, check that ANT. SELECT. switch on rf amplifier is in CROSSED LOOP position. Check cable connections from df receiver to azimuth indicator (W303A), from df receiver to rf switch (W304A), from rf switch to signal goniometer (W501), and antenna cables from crossed-loop antenna to signal goniometer (W201 through W204). Refer to troubles common to df receiver (par. 184).
21	LOCAL GAIN control	Adjust for desired loudspeaker volume.	Speaker volume will change.	If there is no sound from the loudspeaker on azimuth indicator, check W302 connecting df receiver LOCAL AUDIO output to P301 on azimuth indicator.
22	MEGACYCLE CHANGE switch.	Turn to band that includes desired frequency.	Changes reading of first two digits of frequency indicating dial.	If reading of first two digits does not change, refer to TM 11–856 and check drive mechanism on df receiver.
	When signal is a phone signal			
23	BFO switch	Set to OFF	None	None.
24	FUNCTION switch	Set to MGC	Receiver will overload on strong signals (sound distorted) unless rf gain is reduced.	Reduce RF GAIN control until overloading is eliminated.
25	BANDWIDTH control	Set to 2 KC position	Interference from adjacent stations will be less than when operating on higher positions.	If selectivity does not change, check BANDWIDTH switch on df receiver.
26	LIMITER switch	Set to approximately 5	Ignition static and other impulse noises on df receiver will be reduced.	Refer to TM 11–856 and check limiter tubes in df receiver.

	No.	Item	Action or condition	Normal indications	Corrective measures
EQUIPMENT PERFORMANCE		*When signal is a cw signal*			
	27	BFO switch	Set to ON	If df receiver is tuned to signal, beat note will be heard.	If an audible tone is not heard, refer to TM 11–856 and check bfo tube in df receiver.
	28	BFO PITCH control	Turn to produce desired audible pitch.	Audible tone will be heard from the loudspeaker.	Same as corrective measures for item 27.
	29	RF GAIN control	Adjust for propeller-shaped pattern.	As gain is increased, pattern sides collapse and meet in center, forming normal propeller-shaped pattern.	If propeller-shaped pattern cannot be obtained, check that df receiver is tuned to signal by use of CARRIER LEVEL meter and also that gain potentiometer R123 is controllable by varying RF GAIN control. If so, check if cable W303A from df receiver to azimuth indicator. If good, check if amplifier V301 in azimuth indicator.
	30	Azimuth indicator SENSE switch.	Press fully	An arrowhead (sense) pattern is formed which points in direction of direct bearing.	Check operation of goniometer relay by listening for an audible click when SENSE switch is depressed. If relay is normal, check SENSE switch for poor contacts.
STOP	31	Azimuth indicator	Set MAIN POWER switch to OFF.	All panel lights out, pattern off, goniometer drive stops.	Check MAIN POWER switch S303 in azimuth indicator.

102. Equipment Performance Checklist for Rf Amplifier and Df Receiver

	No.	Item	Action or condition	Normal indications	Corrective measures
START	1	Switch box	Turn on power. Refer to paragraph 101, items 1 through 10.	Refer to paragraph 101, items 1 through 10.	Refer to paragraph 101, items 1 through 10.
	2	Rf amplifier POWER switch.	Set to ON	Azimuth scale above hand wheel should light.	Check cable W902. Check fuse F201 located on side of rf amplifier. If fuse is normal, refer to rf amplifier troubleshooting chart (par. 189).
	3	Rf amplifier ANT. SELECT. switch.	Set to SINGLE LOOP	None	None.
	4	BAND SWITCH	Set to band that includes desired frequency.	None	None.
	5	Tuning dial	Set to desired frequency.	None	None.
	6	MEGACYCLE CHANGE switch and KILOCYCLE CHANGE control on df receiver.	Set to read desired frequency on frequency indicating dial.	None	None.
	7	RF GAIN and LOCAL GAIN controls on df receiver.	Set to midpositions 5	None	None.

No.	Item	Action or condition	Normal indications	Corrective measures
8	FUNCTION switch on df receiver.	Set to AGC	If df receiver is tuned to signal, sound will be heard in loudspeaker.	If there is no sound, check cable W302 from df receiver LOCAL AUDIO output to azimuth indicator.
9	FUNCTION switch on df receiver.	Set to MGC	Receiver will overload on strong signals (sound distorted) unless RF GAIN control is reduced.	Reduce RF GAIN control until overloading is eliminated.
	When signal is a phone signal			
10	BFO switch on df receiver.	Set to OFF or ON whichever gives better results.	None	None.
11	BANDWIDTH switch on df receiver.	Set to 2 KC or less	Interference from adjacent stations will be less than when operating on higher positions.	If sensitivity does not change, check BANDWIDTH switch on df receiver.
12	LIMITER switch on df receiver.	Set to midposition if required to reduce impulse noise.	Ignition, static, and other impulse noises in df receiver will be reduced.	Check limiter tubes V507 and V510 in df receiver.
	When signal is a cw signal			
13	BFO switch on df receiver.	Set to ON	If df receiver is tuned to signal, beat note will be heard.	If an audible tone is not heard, vary BFO PITCH control. Check bfo tube V508 in df receiver.
14	BFO PITCH control on df receiver.	Turn to produce desired audible pitch.	Audible tone will be heard from loudspeaker.	Same as corrective measures in item 13 above.
15	Tuning control on rf amplifier.	Tune for maximum signal strength.	Signal strength should increase.	Turn rf amplifier tuning dial back and forth until maximum audio is obtained.
16	RF amplifier hand wheel.	Rotate to determine that a null is present.	There will be two positions 180° apart where audio drops in value.	Check that east-west loop has been removed. Inspect slip ring ring brushes for poor contact. If normal, check for open circuit to one leg of loop antenna.
17	RF GAIN control on df receiver.	Turn clockwise to increase gain as necessary to determine null position.	Audio should increase	Check to see that FUNCTION switch is in MGC position.
18	Rf amplifier hand wheel.	Turn to get loudest signal from loudspeaker. Note reading on LINE LEVEL meter.	There will be two positions 180° apart where audio is maximum.	Same as for corrective measures in item 16.
19	ANT. SELECT	Turn to MONITOR	Equal audio at all positions of hand wheel.	Inspect slip ring brushes (fig. 110) for poor contacts. If normal, check sense amplifier relay. If normal, refer to rf amplifier troubleshooting chart (par. 189).
20	SENSE GAIN	Adjust until signal is as loud as that obtained with loop antenna as indicated on LINE LEVEL meter in item 18.	Signal should change when SENSE GAIN control is turned.	Check sense amplifier V201 or potentiometer R204.

	No.	Item	Action or condition	Normal indications	Corrective measures
EQUIPMENT PERFORMANCE	21	ANT. SELECT	Turn back to SINGLE LOOP.	Signal should be same strength in both SINGLE LOOP and MONITOR positions of ANT. SELECT. switch.	Readjust SENSE GAIN control.
	22	Hand wheel	Turn to null position, then rotate 90° in direction of increasing azimuth on white scale.	Signal strength will change.	Same as for corrective measures in item 19.
	23	Sense switch	Press to midposition, sense white.	If signal decreases, reading obtained at null on white scale is the direct bearing. Read white scale. If signal increases proceed to next step.	Inspect sense switch for poor contacts. Check sense amplifier relay.
			Press to full down position, sense red.	If signal decreases, reading obtained at null on red scale is direct bearing.	Same as above.
STOP	24	POWER switch on rf amplifier.	Set to OFF	Azimuth scale light goes out.	Check POWER switch.

103. Equipment Performance Checklist for Radio Transmitter T–279/UR

	No.	Item	Action or condition	Normal indications	Corrective measures
PREPARATORY	1	Cover	Unlatch and open.		
	2	Antenna	Fully extend all five sections.		
START	3	TRANSMITTER switch.	Place TRANSMITTER switch in ON position.	INDICATOR light should flash signifying that radio transmitter is in operation.	Check batteries with TRANSMITTER switch ON. Measure battery voltages using dc voltmeter. B battery voltage should be at least 120 volts between terminals 1 and 4 of terminal board E602 (fig. 135). A battery voltage should be at least 1.3 volts between terminals 5 and 6 of the terminal board. Check the tubes. Remove each tube shield by pushing it down, giving it a slight twist counterclockwise and then pulling it up. Remove each tube by using a gentle upward pull combined with a gentle rocking. ***Caution:*** Do not twist tube in socket since this will break off the small contact pins. Test the tubes for proper emission, leakage and short circuits, using tube tester or replace doubtful tubes with new tubes. Check neon lamp. Unscrew plastic lens of neon bulb indicator lamp on top panel. Remove bayonnet-base lamp by pushing in and turning counterclockwise. Clean contacts and replace. Install new neon bulb.
EQUIPMENT PERFORMANCE	4	BANDSWITCH	Turn BANDSWITCH to band that includes desired frequency.	None	None.
	5	Tuning control	Set tuning control to desired frequency.	Signal should be heard in receiver at selected frequency.	Check setscrew at tuning capacitor-dial drive connection. Check setscrew on shaft coupling between tuning capacitors.
	6	MCW-CW switch	Set to MCW	Audible tone should be heard in receiver at selected frequency.	Check audio oscillator V603 by substituting new tube. Refer to radio transmitter troubleshooting chart (par. 198).
	7	MCW-CW	Set to CW	Hissing or rushing sound should be heard in receiver at selected frequency.	Refer to radio transmitter troubleshooting chart (par. 198).
	8	Increase OUTPUT	Turn fully clockwise for maximum signal strength.	Signal strength should increase as indicated on meters on receiver.	Refer to radio transmitter troubleshooting chart (par. 198).
STOP	9	TRANSMITTER switch.	Set to OFF	No signal at receiver. INDICATOR light out.	Refer to radio transmitter troubleshooting chart (par. 198).

CHAPTER 5

THEORY

Section I. FUNDAMENTAL PRINCIPLES

104. Direction Finding Principles

a. Before considering in detail the many features of Direction Finder Set AN/TRD–4A, it is useful to consider first some of the fundamental properties of radio waves which make direction finding possible.

b. Radio waves travel outward in space from a transmitting antenna with the speed of light in the same manner that water wavelets travel at a much lower speed outward from a point in a disturbed water surface. The radio wave has the same phase at all points which are the same distance from the transmitting antenna. *Same phase* means that the waves arrive simultaneously at points that are equidistant from the transmitter.

c. Points that are equidistant from the transmitter lie on an imaginary *equiphase surface,* commonly known as a *wave front.* Wave fronts in free space are always spherical since all points equidistant from a single point must lie on the surface of a sphere. This point, the center of the imaginary sphere, is the transmitter site. The spherical curvature of the wave front is quite pronounced near the transmitter. At greater distances, the curvature is so slight over the area covered by a receiving antenna that, for most practical purposes, a wave front may be considered to be a plane surface. Any projected line perpendicular to an undistorted wave front passes through the transmitter.

d. A direction finder set always first locates an equiphase surface or wave front. The direction to the transmitter then is assumed to be perpendicular to the wave front (figs. 53 and 54).

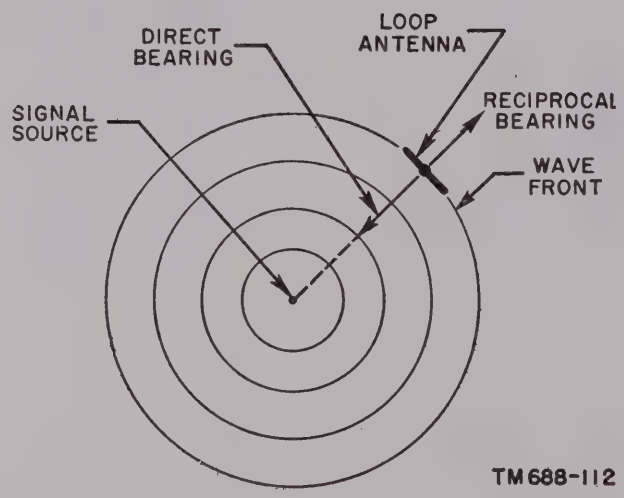

Figure 53. Loop antenna intercepting a wave front.

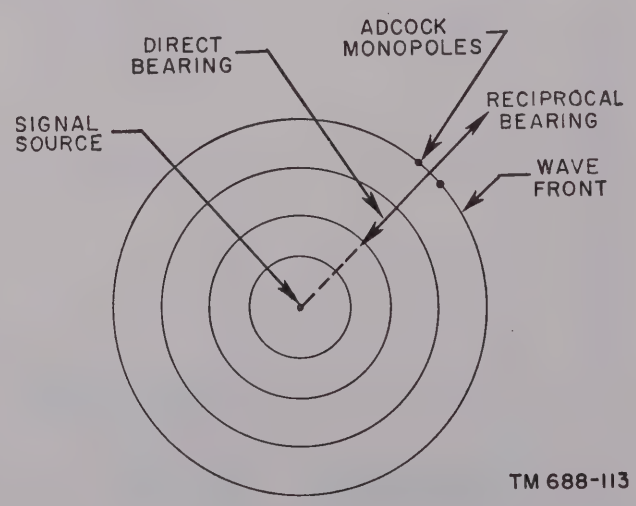

Figure 54. Adcock monopoles intercepting a wave front.

105. Direction Finder Set

a. A practical direction finder set consists of three basic elements: a directional antenna, a radio receiver, and an indicator.

b. The directional antenna provides a means for locating the wave front since the antenna output varies with the orientation of the plane of the antenna relative to the wave front.

c. The radio receiver selects and amplifies the desired signal.

d. The indicator tells the operator when the plane of the antenna is parallel to the wave front.

106. Directional Antenna

a. Direction finding is accomplished in Direction Finder Set AN/TRD–4A with directional antennas that have a figure-eight response pattern (fig. 55). The Adcock and loop antennas, both of which have a figure-eight response pattern are available to be used with Direction Finder Set AN/TRD–4A. The output from a figure-eight antenna varies from minimum to maximum as the antenna is rotated from a position parallel to the wave front to a position perpendicular to the wave front (fig. 55).

b. Direction finding with a figure-eight antenna is accomplished by rotating the antenna until a minimum or null is detected. In the case of manual rotation, the null may be detected aurally by listening to the signal from either headphones or a loudspeaker. The figure-eight antenna may also be rotated continuously by a motor and an automatic visual indication of the null position may be presented on a cathode-ray tube.

c. Regardless of whether the antenna is rotated slowly back and forth by hand or continuously with a motor, the fundamental profess is the same. A null type of bearing indication is obtained when the plane of the antenna is parallel to the wave front. There are always two positions for which the plane of the antenna is parallel to the wave front. Therefore, there are always two nulls that correspond to the nulls of the figure-eight pattern shown in figure 55.

d. The two nulls of the figure-eight pattern represent the direct and reciprocal bearings. Sensing is the process through which the direct and reciprocal bearings are distinguished. Sensing is further discussed in paragraphs 120 and 123.

e. The simplest way to find direction is to rotate the figure-eight antenna. However, sometimes the antennas are so large that actual rotation is slow and cumbersome. The difficulty can be overcome and the effect of rotation can be produced without actually moving the antenna. Effective or *virtual* rotation of a figure-eight antenna can be produced by using two fixed figure-eight antennas in connection with a goniometer. Virtual rotation is accomplished in Direction Finder Set AN/TRD–4A by using either crossed-loop or Adcock antenna swith a signal goniometer.

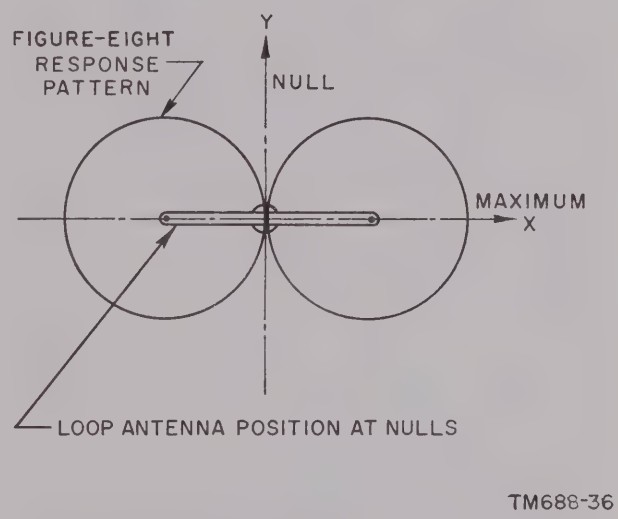

Figure 55. Response pattern for a loop antenna.

107. Radio Receiver

a. Before the direction of arrival of a signal can be indicated, it must be separated from other unwanted signals and amplified to a useful magnitude. Thus, the task of the radio receiver is to select, amplify, and detect the signal from the antenna. The radio receiver output is then fed to the indicating device which may present either an aural or visual type indication.

b. The antenna array is essentially a wide-band component. Many frequencies and random noise may be presented in addition to the desired frequency. Moreover, the unwanted signals or noise may be of greater amplitude than the desired signal. The sensitivity of the radio receiver provided with Direction Finder

Set AN/TRD–4A is 3 microvolts for amplitude-modulated signals and 1-microvolt for cw signals.

108. Indicator

Two general methods, aural and visual, are used for indication.

a. Aural. The aural method makes use of the conventional audio circuits of the receiver to drive a loudspeaker. Two nulls in the loudspeaker output will be encountered as the antenna is rotated through 360°. One of the nulls represents the direct bearing and the other represents the reciprocal bearing of the transmitter. The two bearings are distinguished by sensing. The direct bearing is indicated on either the azimuth scale which is located on the rf amplifier or the bearing indicator scale, which is located on the goniometer drive.

b. Visual. A visual indication of the direction of arrival of a signal is presented on a 5-inch cathode-ray tube. Two patterns are presented on the cathode-ray tube. One, a propeller-shaped pattern, is called the bearing pattern. One of the propeller tips points to the reciprocal bearing and the other points to the direct bearing. The 180° ambiguity is resolved by the second pattern called a sense pattern. The sense pattern is an arrowhead pattern that points in the direction of the direct bearing.

109. Wave Propagation

a. Propagation. Radio waves will propagate principally along a great circle path, but because they can be reflected and refracted, propagation may deviate from a great circle path as the waves meet obstructions or encounter varying atmospheric and terrain conditions.

b. Types of Waves. Two types of waves are encountered: the ground wave and the sky wave. The ground wave portion of the energy radiated from a transmitting antenna is confined to the troposphere or lower levels of the atmosphere. The sky-wave portion is radiated upward into the upper ionized layers (the ionosphere) where they may be radiated back to earth. Ground waves may travel directly or may be reflected by the ground or other objects on their way to the receiver. The reliability of bearings obtained on ground and sky waves is discussed in paragraph 63.

(1) *Ground-wave range.* The ground wave is usually encountered at frequencies below 1 mc when the transmitter is within range. The ground-wave range decreases as the frequency of the signal increases.

(2) *Sky-wave range.* At frequencies from 1 to 30 mc and where the transmitter is beyond the ground-wave range, the sky wave predominates.

(3) *Skip zone.* A critical angle exists for each frequency beyond which a wave entering the ionosphere will not be reflected but will continue into outer space. For this reason, there will exist zones which are beyond ground-wave range which will not receive sky waves at the transmitter frequency.

(4) *Ground- and sky-wave range.* There are frequencies for which a skip zone does not exist in the region that is within ground-wave range. Thus, both ground and sky waves may combine at the receiving antenna causing severe fading, swinging and blurring of the bearing pattern (par. 69).

110. Errors in Direction Finding

a. General. For convenience, the bearing errors which are encountered using direction finder equipment may be divided into several general types.

(1) *Propagation errors.* Errors depending on the time of day and the conditions under which a wave is propagated are known as propagation or path errors.

(2) *Instrumental errors.* Errors inherent in the equipment are called instrumental errors.

(3) *Site errors.* Errors caused by the characteristics of the locale in which the direction finder equipment is installed are known as site errors.

b. Propagation Errors.

(1) *Ionospheric lateral deviation errors.* When a wave is reflected from the ionosphere along a path that deviates from the great circle connecting the transmitter and the receiver, ionospheric lateral deviation errors result. These errors are caused by tilting of the ionospheric layer and can result in bearing errors of as much as 4° or 5° when it is the sole source of the

error. Larger bearing errors may result if lateral deviation is present together with other interference. The presence of lateral deviation is usually recognized by a slow swinging during a period of several minutes.

(2) *Coastal refraction errors.* When a ground wave encounters an abrupt change in terrain conditions (oblique to the direction of propagation), refraction may occur causing bearing errors of as much as 4° or 5°. This type of error usually occurs in coast line installations and is known as coastal refraction error. The presence of this type is not readily detectable.

(3) *Polarization errors.* When the arriving wave is abnormally polarized, bearing errors of as much as 90° are possible. On one hand, polarization errors are characterized by either broad, indefinite, displaced nulls or rounded propeller tips depending on the type of indication being used; on the other hand, the nulls may be sharp although displaced. In either case, a slow swinging of the bearing is observed. Evidence of polarization error should always be a warning that bearings taken under these conditions are unreliable and if possible should be taken several hours later. The use of the Adcock antenna will produce the most accurate bearings when polarization errors are present.

(4) *Multipath interference errors.* The simultaneous presence of ground and sky waves at the direction finder antenna (par. 109*b*(4)) causes difficulties in attempting to establish a bearing. This phenomenon, called multipath interference, is caused by any two or more waves arriving at the receiving antenna by different routes. The waves combine to cause cancelation or reinforcement of the signal and an apparent shift in bearing may result if any of the waves are abnormally polarized. Errors caused by multipath interference are more pronounced when a loop antenna is used, especially when polarization error is present. The use of the Adcock will produce the most accurate bearings when multipath interference errors are present.

c. Equipment Errors. There are two general types of equipment errors. Those which are inherent in the equipment, such as octantal error, should be distinguished from those resulting from faulty installation or adjustment of the equipment.

(1) *Octantal error.* When the diagonal spacing between monopoles of the Adcock antenna is 18 feet 10 inches and the frequency of the arriving signal is greater than 6 mc, the monopole spacing becomes greater than one-eighth wave length. When the monopole spacing is greater than one-eighth wave length, the response pattern of the Adcock antenna is distorted, producing a bearing error (octantal error) which varies with the frequency of the arriving signal in the direction of arrival of the signal (fig. 50). Directions for correcting for octantal error are contained in paragraph 70.

(2) *Quadrantal error.* The quadrantal error is the result of either some equipment or site faults. For example, when both loops of the crossed-loop antenna are not identical, the reception from the larger loop will bias all bearings in its favor. Careful construction of the loops keeps this error at a negligible value in Direction Finder Set AN/TRD–4A. The same type of error may result from improper spacing and installation of the Adcock antenna monopoles, as well as from unbalance of the feeders.

d. Site Errors. The site on which the equipment is installed can be a source of error when taking bearings. Factors, such as irregularities in ground conductivity, the presence of near-by conductors, or the topography of the site, may introduce errors. Use of the counterpoise will decrease the errors caused by nonuniform ground conductivity while selection of a good site free from overhead conductors and far

enough from hills will eliminate most of the other site errors. The bases of the Adcock antenna monopoles and the connectors should be kept free from condensation and dirt which might eventually create a low resistance path to ground and create unbalance in the system.

Section II. BLOCK DIAGRAMS

111. General

a. Direction Finder Set AN/TRD–4A is a versatile radio direction finding system, which contains both fixed and rotatable antenna arrays and which has two different methods of reading signal bearings. The mode of operation to be used depends on the location, time allowed, and accuracy required (par. 62).

b. The table below lists the five separate modes of operation of this system for direction finding.

No.	Type of operation	Antenna	Indicator	Bearing scale	Fig. ref.
1	Visual	Adcock	Cathode-ray tube	Alidade scale assembly	56
2	Visual	Crossed-loop	Cathode-ray tube	Alidade scale assembly	56
3	Aural-null	Adcock	Loudspeaker or headphones.	Goniometer drive bearing indicator scale.	57
4	Aural-null	Crossed-loop	Loudspeaker or headphones.	Goniometer drive bearing indicator scale.	57
5	Aural-null	Single-loop and sense monopole.	Loudspeaker or headphones.	Azimuth scale on rf amplifier.	58

c. The manner in which the various direction finding components of Direction Finder Set AN/TRD–4A are interconnected is shown in the cabling and interconnecting diagrams (fig. 138). Paragraphs 112 through 114 describe the overall functioning of the major components in conjunction with the block diagrams shown in figures 56, 57, and 58. Paragraphs 115 through 162 present the individual circuitry of each component in detail.

112. Instantaneous Visual Operation (fig. 56)

a. Antennas. In this mode of operation, virtual rotation of the antenna is used. Either the crossed-loop or the Adcock antenna may be cabled to the signal goniometer. The output of either antenna array is a spectrum of rf signals that extends over the range of the array. The spectrum of radio signals is connected to the signal goniometer through four separate coaxial cables and connectors.

b. Signal Goniometer. The input to the signal goniometer is applied to the stator windings of the goniometer. The position of the magnetic field produced by the stator windings of the signal goniometer is determined by the direction of arrival of the signal. The signal goniometer output is taken from the goniometer rotor which is rotating in the magnetic field. The effect of the rotor turning in the magnetic field is to amplitude modulate the received signal. The rotor is driven by the goniometer drive motor at a speed of 27 revolutions per second. Two maximum and two minimum induction points occur per revolution to produce a 54-cycle amplitude modulation of the signal. The 54-cycle, amplitude-modulated signal output of the signal goniometer is fed through the rf switch to the direction finder receiver.

c. Rf Switch. The R.F. SWITCH is a two-position switch located on top of the electrical equipment cabinet. When the switch is in the R.F. AMPLIFIER position, the input to the df receiver comes from the rf amplifier. During instantaneous visual operation, the R.F. SWITCH is in the GONIOMETER position and the output from the signal goniometer is connected to the df receiver.

d. Df Receiver. The df receiver is a high-gain, high-selectivity, multiconversion-type receiver. The df receiver is tuned to the frequency of the signal whose direction the operator wishes to determine. This signal is amplified, converted to an intermediate frequency of 455 kc, further amplified, and applied to the azimuth indicator.

e. Azimuth Indicator. In this mode of operation, the function of the azimuth indicator is to give a visual indication of the direction of arrival of a signal.

(1) *If amplifier.* The if amplifier amplifies the 54-cycle amplitude-modulated 455-kc signal from the df receiver. The amplified signal is applied to the detector.

(2) *Detector.* The output of the if amplifier is demodulated by a crystal detector circuit. The output of the crystal detector is a negative-going pulsating dc voltage that is applied to the control modulator. The phase of this voltage depends on the direction of arrival of the signal.

(3) *Rf oscillator.* The output from the rf oscillator is a constant-amplitude 72-kc signal that is applied to the control modulator.

(4) *Control modulator.* There are two inputs to the control modulator. One input is the constant-amplitude 72-kc signal output from the rf oscillator, the other is the detector output. The output of the control modulator depends on signal conditions.

(*a*) *No signal.* When there is no output from the df receiver, there is no output from the detector. The only input to the control modulator is the constant-amplitude 72-kc signal from the rf oscillator. The output from the control modulator is an amplified constant-amplitude 72-kc signal.

(*b*) *With signal.* When there is an output from the df receiver, the output from the detector is a negative-going pulsating dc voltage. This voltage varies the bias on the control modulator from 0 to approximately —3 volts. As the bias increases, the amplification of the control modulator decreases. At approximately —3 volts bias, the control modulator is cut off and the output from the control modulator is zero. The output from the control modulator is the 72-kc signal, amplitude-modulated by the detector output.

(5) *Rf amplifier.* The rf amplifier amplifies the output from the control modulator so that the amplitude of the voltage is sufficient to be applied to the deflection plates of the cathode-ray tube. The output of the rf amplifier is applied to the rotor winding of the indicator goniometer.

(6) *Indicator goniometer.* The goniometer drive motor turns the rotors of both the indicator goniometer and the signal goniometer. The indicator goniometer input is applied to the rotor winding, the outputs are taken from the stator windings. One of the stator windings is connected to the vertical deflection plates of the cathode-ray tube and the other is connected to the horizontal deflection plates.

(*a*) *No signal.* When no signal is present, the constant-amplitude 72-kc signal is applied to the rotor of the indicator goniometer. If the rotor winding were parallel to the stator winding that is connected to the vertical deflection plates, a vertical line would appear on the screen of the crt. If the rotor winding were parallel to the stator winding connected to the horizontal deflection plates, a horizontal line would appear on the screen of the crt. Because the indicator goniometer rotor is rotating, at the same speed as the signal goniometer rotor, the line rotates at the same speed as the rotors and pivots about the center of the screen. Because of the persistence of the material coating the screen, the line appears as a filled in circle (G1, fig. 74). The length of the line, hence the diameter of the circle is determined by the amplitude of the 72-kc signal.

(*b*) *With signal.* When a signal is present, the amplitude-modulated 72-kc signal is applied to the rotor of the indicator goniometer. When the modulating signal cuts off the control modulator, no 72-kc signal

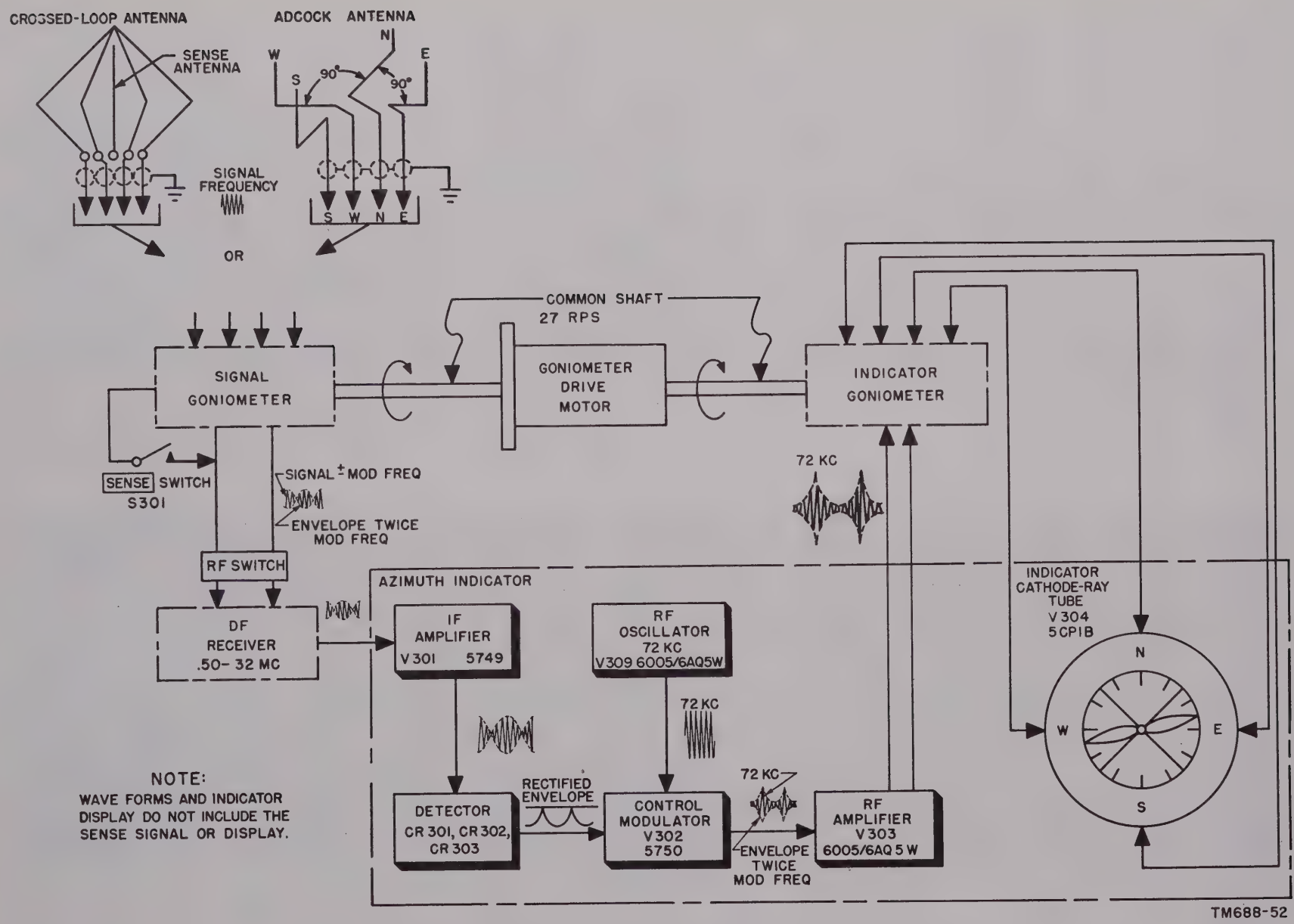

Figure 56. Functional block diagram, instantaneous visual operation.

is applied to the indicator goniometer rotor, nothing is induced in the stators, and there is no deflection of the cathode-ray tube beam. When the modulating signal is zero, the 72-kc signal is applied to the rotor and is induced in the secondary to produce a line on the face of the crt. Although the line rotates as in (*a*) above, the length of the line changes. The amplitude modulation of the 72-kc signal produces a propeller-shaped pattern (G2, fig. 74) on the face of the crt. The tips of the propeller point to the direct and reciprocal bearings. When the sense switch is closed, sense voltage is added to the signal and the propeller-shaped pattern changes to an arrowhead pattern (G4, fig. 74). The arrowhead points in the direction of the direct bearing.

113. Aural-Null Operation (Crossed-Loop or Adcock Antenna)
(fig. 57)

a. Antennas. As in instantaneous visual operation, either the crossed-loop or the Adcock antenna may be cabled to the signal goniometer.

b. Signal Goniometer. The input to the signal goniometer is applied to the stator windings. The position of the magnetic field produced by the stator windings of the signal goniometer is determined by the direction of arrival of the signal. The signal goniometer output is taken from the rotor, which is manually rotated by turning the bearing indicator scale on the goniometer drive. When the signal goniometer rotor is parallel to the magnetic field produced by the stator windings, the rotor output is maximum. When the rotor is perpendicular to the field, the output is minimum. The signal goniometer output is connected through the R.F. SWITCH (par. 112*c*) to the df receiver.

c. Df Receiver. The df receiver is tuned to the frequency of the signal whose direction the operator wishes to determine. The signal is amplified, converted to an intermediate frequency of 455 kc, detected, and the audio output is applied to the loudspeaker in the azimuth indicator.

d. Bearing Indicator Scale and Pointer. The bearing indicator scale on the goniometer drive is manually rotated and drives the rotor of the signal goniometer. The bearing indicator scale is rotated until a null in the loudspeaker output is obtained. The null is an indication that the signal goniometer rotor is perpendicular to the magnetic field produced by the stators. Therefore, the position of the rotor when the null is obtained is an indication of the direction of arrival of the signal.

e. Sensing. When the sense switch is closed, sense voltage is added to the signal. When the sense switch is pressed, if the signal decreases, when the bearing indicator scale is rotated toward an increasing azimuth on the white scale, the azimuth is read on the white scale. If the signal increases when the bearing indicator scale is rotated toward an increasing azimuth on the white scale, the azimuth is read on the red scale.

114. Aural-Null Operation (Single-Loop Antenna)
(fig. 58)

a. Antenna. The crossed-loop antenna used in the modes of operation discussed in paragraphs 112 and 113 consists of both an east-west loop and north-south loop. During aural-null operation, using the single-loop antenna, the east-west loop is removed (par. 46*a*) and only the north-south loop is used. A separate sense monopole mounted in the center of the single-loop provides sense voltage in this mode of operation. The single-loop antenna is rotated with a hand wheel and shaft that extend through the roof of the shelter. Signals from the single-loop antenna are transferred through slip rings to antenna selector switch S201 located on the rf amplifier.

b. Rf Amplifier.

(1) *Antenna selector switch.* ANT. SELECT. switch S201 is a three-position switch. In the CROSSED LOOP position, the crossed-loop antenna is connected to the signal goniometer. In the MONITOR position, the crossed-loop antenna is disconnected and the output of the sense monopole is connected through relay K201 to sense amplifier V201. During aural-null operation, using the single-loop

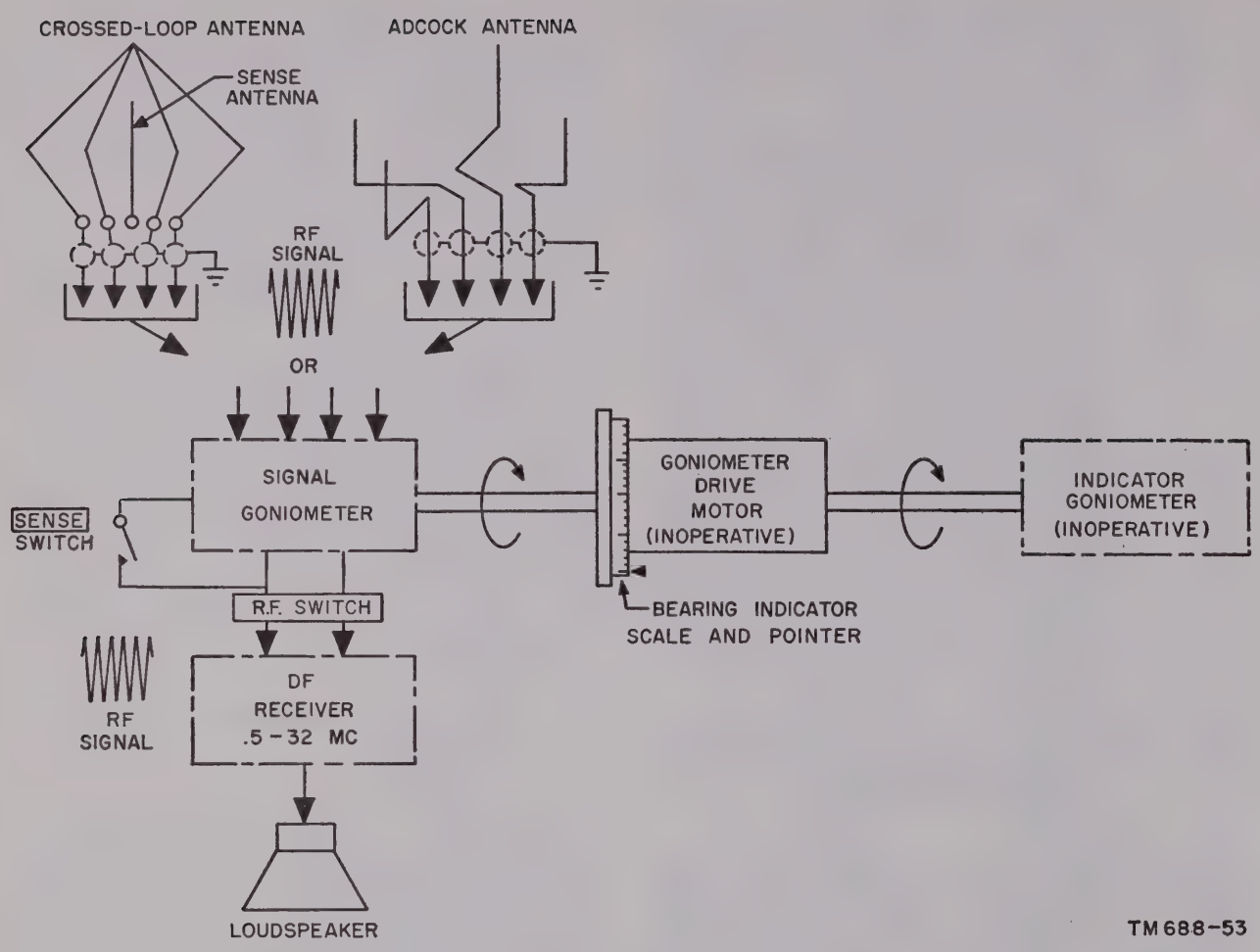

Figure 57. Functional block diagram, aural-null operation using either the crossed-loop or the Adcock antenna.

antenna, the ANT. SELECT. switch is in the SINGLE LOOP position and the output of the single-loop antenna is connected to coupling transformer T206

(2) *Coupling transformer.* Coupling transformer T206 matches the balanced single-loop antenna output to the unbalanced input to phase inverter V202.

(3) *Sense switch.* Sense switch S202 is a three-position switch located on the rf amplifier. In the sense white and sense red positions, the sense switch adds sense voltage to the single-loop antenna output. In the sense red position, the sense switch reverses the single-loop antenna connections. In the direction finder position, the sense switch de-energized relays K201 and K202.

(4) *Relay K201.* Relay K201 grounds the output from the sense monopole when it is de-energized and removes the ground when it is energized. The relay is energized in the sense white and sense red positions of the sense switch and is de-energized in the direction finder position.

(5) *Relay K202.* Relay K202 opens the cathode circuit of sense amplifier V202 when it is de-energized and completes the cathode circuit when it is energized. Relay K202 is in parallel with K201.

(6) *Sense amplifier.* Sense amplifier V201 amplifies the sense voltage from the sense monopole. The amplified sense

voltage output of the sense amplifier stage is applied to phase inverter V202.

(7) *Band switch and rf transformers.* BAND SWITCH S203 is a five-position switch that is located on the rf amplifier. The BAND SWITCH switch connects the proper tuned transformer in the input circuit of the phase inverter for the particular band chosen. Transformers T201 through T205 are used on bands 1 through 5, respectively. Fine tuning is accomplished by the tuning control that varies the capacitance in parallel with the selected transformer.

(8) *Phase inverter.* Phase inverter V202 provides a balanced output which matches the balanced input to the df receiver.

c. Df Receiver. The df receiver is tuned to the frequency of the signal whose direction the operator wishes to determine. This signal is amplified, converted to an intermediate frequency of 455 kc, detected, and the audio output is applied to the loudspeaker which is located in the azimuth indicator.

d. Azimuth Scale. Both the rf amplifier and df receiver are tuned to the frequency of the signal whose direction the operator wishes to determine. The handwheel is turned to position the single-loop antenna for an aural-null as indicated by minimum output from the loudspeaker. Two possible azimuth readings may be obtained on the azimuth scale when the output from the loudspeaker is minimum.

e. Sensing. To determine which of the two readings obtained in *d* above is the direct bearing, the handwheel is turned 90° in the direction of an increased azimuth. The sense switch is pressed first to the sense white position and then to the sense red position. The position of the sense switch when minimum loudspeaker output is obtained, determines whether the azimuth is read on the white or the red scale. If the signal is weaker in the sense white position than in the sense red position, the direct bearing obtained at the null is indicated on the white scale. If the signal on sense white is stronger than on sense red, the direct bearing obtained at the null is read on the red scale. Refer to the operating procedure for aural-null operation, using the single-loop antenna described in paragraph 76.

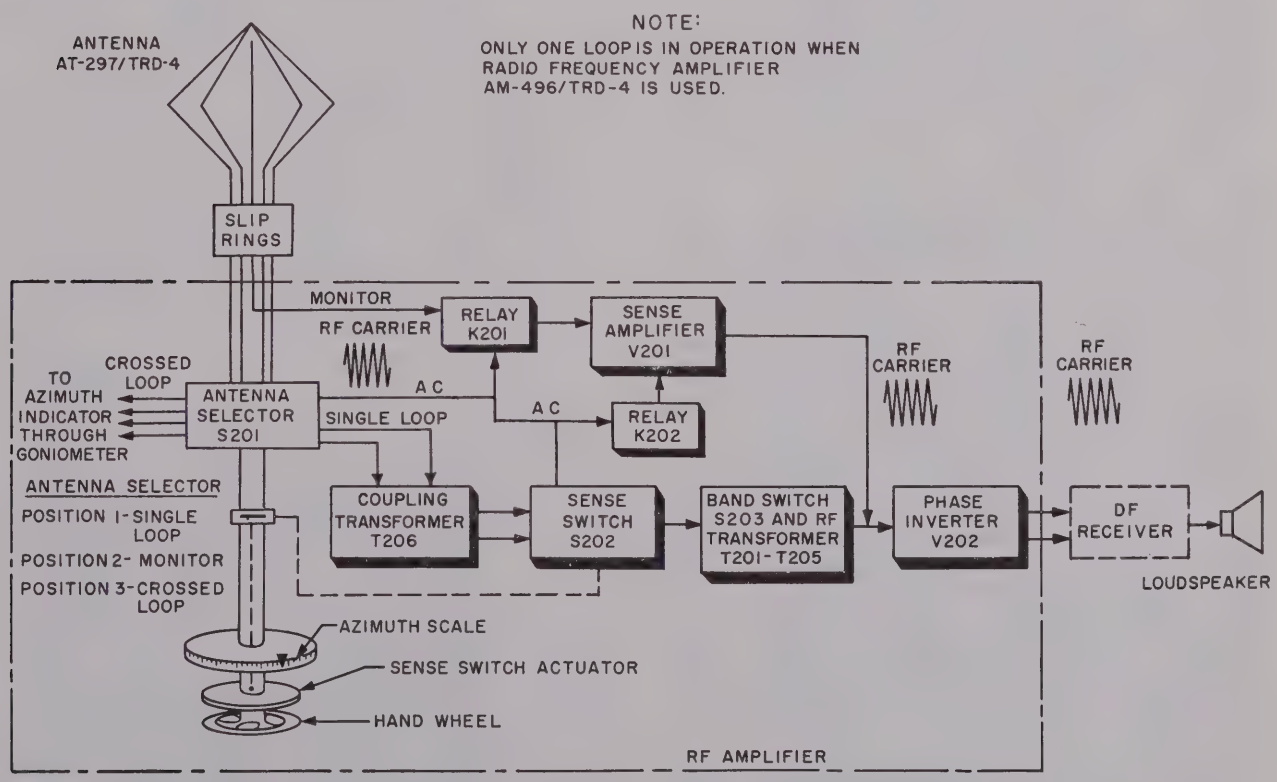

Figure 58. Functional block diagram, single-loop aural-null operation.

115. General

Monitoring and communication are accomplished in Direction Finder Set AN/TRD–4A with nondirectional whip antennas (par. 116). Direction finding is accomplished with directional antennas that have a figure-eight response pattern. The three directional antenna systems available for use with Direction Finder Set AN/TRD–4A are the single-loop (par. 119), crossed-loop (par. 122), and Adcock (par. 124) antennas. When either the crossed-loop or the Adcock antenna is used, virtual rotation of the antenna is used (par. 118).

116. Whip Antennas

a. Two vertically polarized whip antennas are provided with Direction Finder Set AN/TRD–4A. The whip antennas are mounted on the side of the shelter and extend approximately 10 feet above the roof of the shelter. One of the whip antennas is connected to the communication receiver and the other is connected to the intercept receiver.

b. The whip antenna responds equally well to signals from any direction in the horizontal plane. Thus, if a transmitter were moved in a circle about the antenna, identical response would be obtained at equal transmitter distances. A response pattern of the whip antenna is shown in figure 59.

117. Figure-Eight Antennas

a. General. Direction finding with Direction Finder Set AN/TRD–4A is accomplished by using directional antennas that have a figure-eight response pattern. Unlike the whip antenna, the figure-eight antenna does not respond equally well to signals from any direction in the horizontal plane. Thus, if a transmitter were moved in a circle about the figure-eight antenna, unequal response would be obtained at equal transmitter distances. Conversely, if the transmitter were held in one position and the figure-eight antenna were rotated about its central axis, unequal response would be obtained at different antenna positions. The figure-eight response pattern is shown in figure 55.

b. Loops. The type loops provided with Direction Finder Set AN/TRD–4A are vertically polarized, diamond-shaped, single conductors mounted on top of the shelter (fig. 7). The unequal response of the loop antenna is the result of the phase difference between the voltages induced in opposite sides of the loop.

(1) When the plane of the loop is parallel to a vertically polarized wave front (perpendicular to the direction of wave travel), the wave front will reach the sides of the loop at the same time (A, fig. 60). The voltages induced in the sides will be equal in amplitude and of the same phase. The two equal amplitude voltages of the same polarity developed across R201 and R202 are applied to the opposite ends of the primary of coupling transformer T206. Therefore, there is minimum current flow through the primary which results in minimum output called a null.

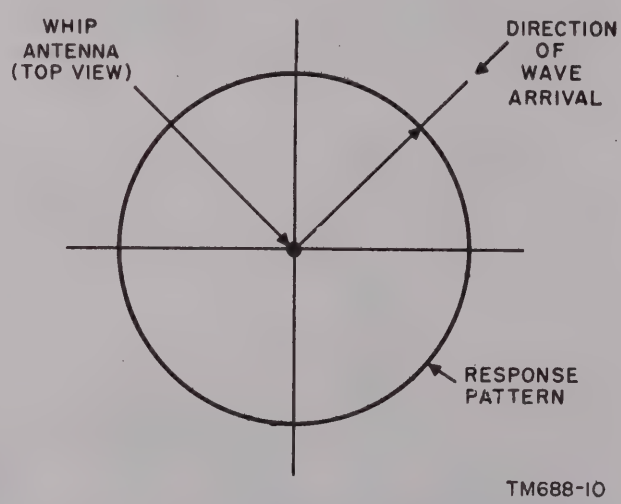

Figure 59. Whip antenna response pattern.

(2) When the plane of the loop is perpendicular to a vertically polarized wave front (parallel to the direction of wave travel), the wave front will arrive at the sides of the loop at different times (B, fig. 60). There will be a difference, therefore, in the phase of the voltages induced in the two sides. There will be a phase difference between the voltages developed across R201 and R202. The voltage across

R201 at any instant will not equal the voltage across R201 at the same instant and an output will be developed across the primary of coupling transformer T206. This output will be maximum when the plane of the loop is perpendicular to the wave front.

c. Polarization Errors. Direction Finder Set AN/TRD–4A is designed to find bearings on waves that travel horizontally and are vertically polarized (ground waves). This is the type of wave received when the transmitter and receiver are on the ground and the distance between the two is small. However, in practice, direction finder sets frequently encounter waves that travel downward toward the earth rather than horizontally over the surface of the earth. This type of wave, called a down-coming wave, might come from an aircraft transmitter or might be a sky wave reflected from the ionosphere. The down-coming wave may display complex and changing polarization characteristics rather than the ideal vertical polarization for which the direction finder set is intended. A horizontally polarized component has no effect on vertical conductors (sides of the loop), but it will induce voltages in horizontal conductors (top and bottom of the loop). If the wave that contains horizontally polarized components travels exactly horizontal, the voltages induced in the top and bottom of the loop will cancel as the voltages induced in the sides canceled as explained in *b*(1) above. However, when a wave that contains a horizontally polarized component is down-coming, the voltages induced in the top and bottom of the loop will not cancel. The voltages induced in the top and bottom of the loop by the horizontally polarized component of the wave combine with the voltages induced in the sides by the vertically polarized component of the wave to produce bearing errors up to 90°. The loop antenna always produces unreliable bearings on a down-coming wave that contains a horizontally polarized component.

d. Adcock Antennas.

(1) *General.* The bearing errors produced by the loop antennas on down-coming waves are caused by horizontally polarized components of the wave. If the antenna did not respond to the horizontally polarized component of the received wave, the bearing errors associated with this component would be eliminated. This reasoning lead to the development of the H Adcock antenna.

(2) *H Adcock antenna* (fig. 61). The H Adcock antenna consists of spaced vertical dipoles, which are differentially connected to coil L. If the spacing between the dipoles is small compared to a wave length, the H Adcock antenna has a response pattern almost identical to the figure-eight response pattern produced by the loop antenna. The horizontal transmission line that connects the two dipoles is carefully balanced and shielded to prevent pickup of the horizontally polarized component of the wave. The vertical dipoles do not respond to the horizontally polarized component. Therefore, the H Adcock antenna minimizes polarization errors.

(3) *U Adcock antenna.* The disadvantage of the H Adcock antenna is that it must be elevated a considerable distance above the ground. This leads to difficulties in construction and erection. These difficulties are eliminated in Direction Finder Set AN/TRD–4A by using the shielded U form of Adcock antenna. Only the upper element of each dipole is used in this form of the Adcock antenna. The upper elements are called monopoles and are erected over a large ground screen called a counterpoise. The counterpoise acts as a mirror under the monopoles and the effect is that the U Adcock antenna reacts like the H Adcock antenna. The missing lower elements or monopoles are replaced by images of the upper monopoles in the counterpoise. If the shielded U Adcock monopoles were installed over soil of uniformly high conductivity, the ground would act as the mirror and the counterpoise would be unnecessary. The counterpoise is supplied to make the performance of the U Adcock antenna substantially independent of soil conditions.

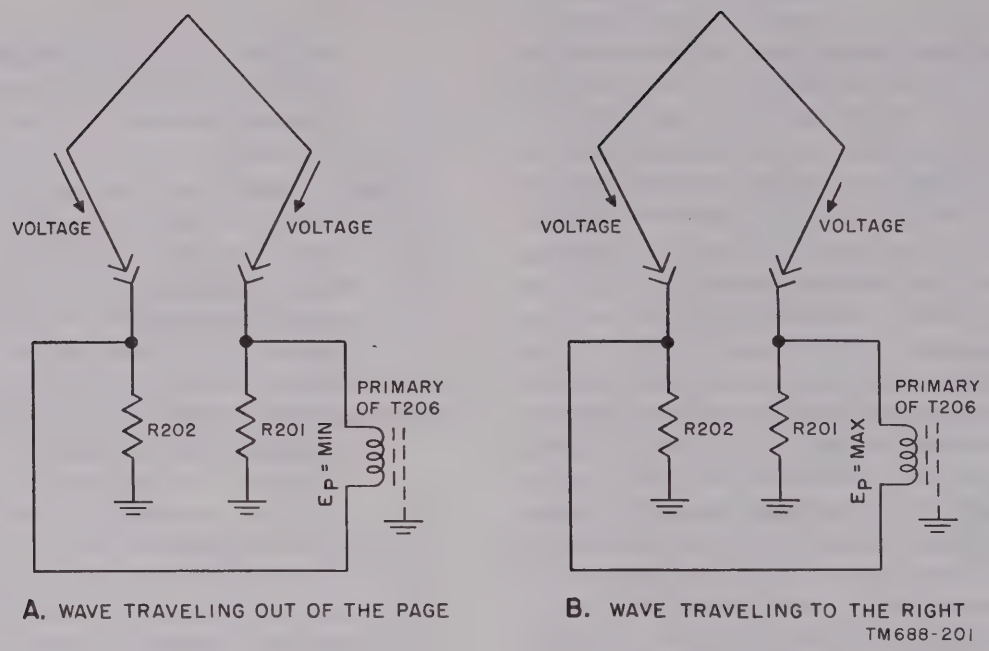

Figure 60. Radio-frequency wave intercepting single-loop antenna.

118. Virtual Rotation of Figure-Eight Antenna

a. The simplest way to find direction with a figure-eight antenna is to rotate either a loop antenna or an Adcock antenna until nulls are obtained. Sometimes, however, the antennas are so massive and cumbersome that actual rotation is slow and difficult. The difficulty can be overcome and the effect of rotation can be produced without actually moving the antenna. Effective or *virtual rotation* of a figure-eight antenna can be accomplished by using two fixed figure-eight antennas in combination with a goniometer.

b. To produce an effect equivalent to the rotation of a single antenna, two figure-eight antennas are used instead of one. These antennas are installed with their planes perpendicular as shown in figure 62. One loop or antenna pair exhibits a figure-eight pattern with its maximums in the north-south direction and the other loop or antenna pair exhibits a second figure-eight pattern, which is identical, except that its pattern maximums are in the east-west direction.

c. The outputs of the two figure-eight antennas are fed to two perpendicular stator coils in a goniometer. The antenna currents flowing through these two perpendicular coils set up a resultant rf field within the goniometer that corresponds in direction to the direction of the wave front acting on the fixed-position figure-eight antennas.

d. The goniometer contains a small rotor or *search coil* that displays a figure-eight pattern as it is rotated between a position parallel to (maximum induced voltage) this resultant field to a position perpendicular to (minimum induced voltage) the field. Rotation of the search coil in the goniometer is almost exactly equivalent to rotating a single figure-eight antenna. This virtual rotation can be accomplished at very great speeds even though the antennas are so massive that actual physical rotation would be impracticable.

119. Single-Loop Antenna

a. One form of a figure-eight directional antenna provided with Direction Finder Set AN/TRD–4A is a diamond-shaped, vertically polarized, single-loop antenna which is part of Antenna AT–297/TRD–4 (crossed-loop antenna). The single-loop antenna can be used only during aural-null operation. To operate in the aural-null operating mode using the single-loop antenna, one loop of the crossed-loop antenna must be removed (par. 46*a*).

b. In operation, the single-loop antenna is rotated by turning the hand wheel located on the rf amplifier until the plane of the loop is

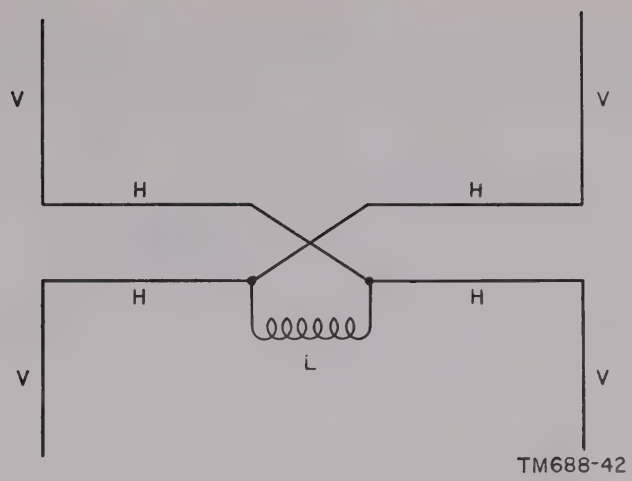

Figure 61. H Adcock antenna.

parallel to the wave front. The indication of this null position is minimum output from the loudspeaker located on the azimuth indicator.

c. There are two positions of the loop, 180° apart, in which the plane of the loop is parallel to the wave front. Therefore, there are two positions of the loop at which a null in the loudspeaker output is obtained. As illustrated in figure 63, one of these nulls is called the direct-bearing null and the other is called the reciprocal-bearing null. Unless the general direction of the transmitter is known, a direction finder set equipped with only a single-loop antenna cannot distinguish between the direct bearing and the reciprocal bearing of the transmitter. Sensing is the procedure by which the reciprocal bearing and the direct bearing are distinguished.

120. Sense Antenna

a. The output of the single-loop antenna changes polarity as the loop is rotated through a null because the signal arrives at the opposite side of the loop first. This change in polarity is illustrated in figure 63 by the positive and negative signs on the figure-eight response pattern.

b. The output of the single-loop antenna is combined with the output of the sense antenna. The sense antenna is a vertically polarized monopole located at the center of the single-loop antenna. The omnidirectional response pattern of the vertical sense antenna, the figure-eight response pattern of the single-loop antenna, and the response pattern resulting from the combination of the two, are shown in figure 63. The output of the sense antenna is in phase with one lobe of the figure-eight response pattern and out of phase with the other lobe. Therefore, the pattern resulting from the combination of the two is the cardioid response pattern.

c. The cardioid response pattern illustrated in figure 63 indicates zero output at the cardioid null. Zero output is obtained at the null only if the amplitude of the omnidirectional response pattern of the sense antenna is exactly equal to the maximums of the figure-eight response pattern of the single-loop antenna and the output of the sense antenna is of the correct phase. The response patterns obtained when the two are not equal are shown in figures 64 and 65. Figure 64 shows the response pattern resulting from the combination of the two when the maximums of the figure-eight response pattern are greater than the omnidirectional response pattern. Figure 65 shows the response pattern developed when the omnidirectional response pattern is greater than the maximums of the figure-eight response pattern. To obtain the ideal cardioid response pattern (fig. 66), the

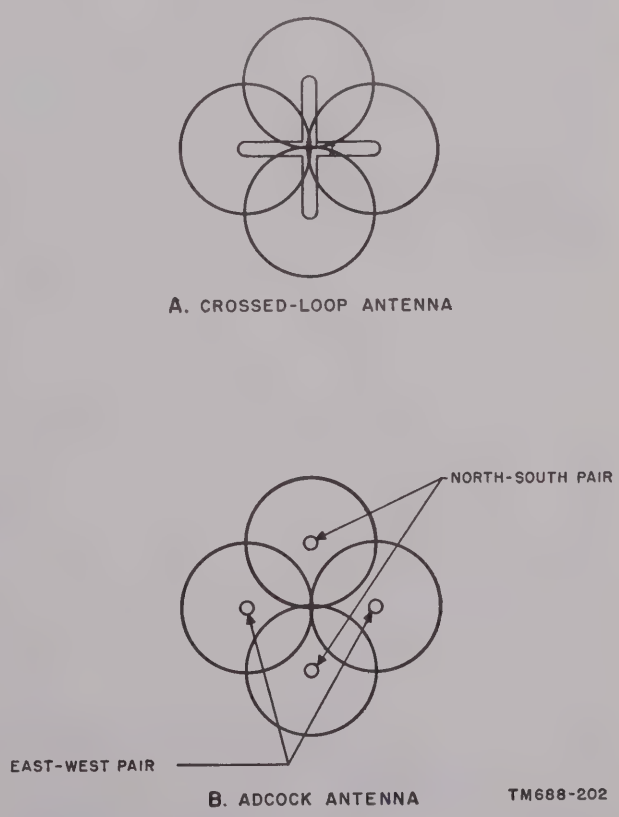

Figure 62. Response patterns of crossed-loop and Adcock antennas.

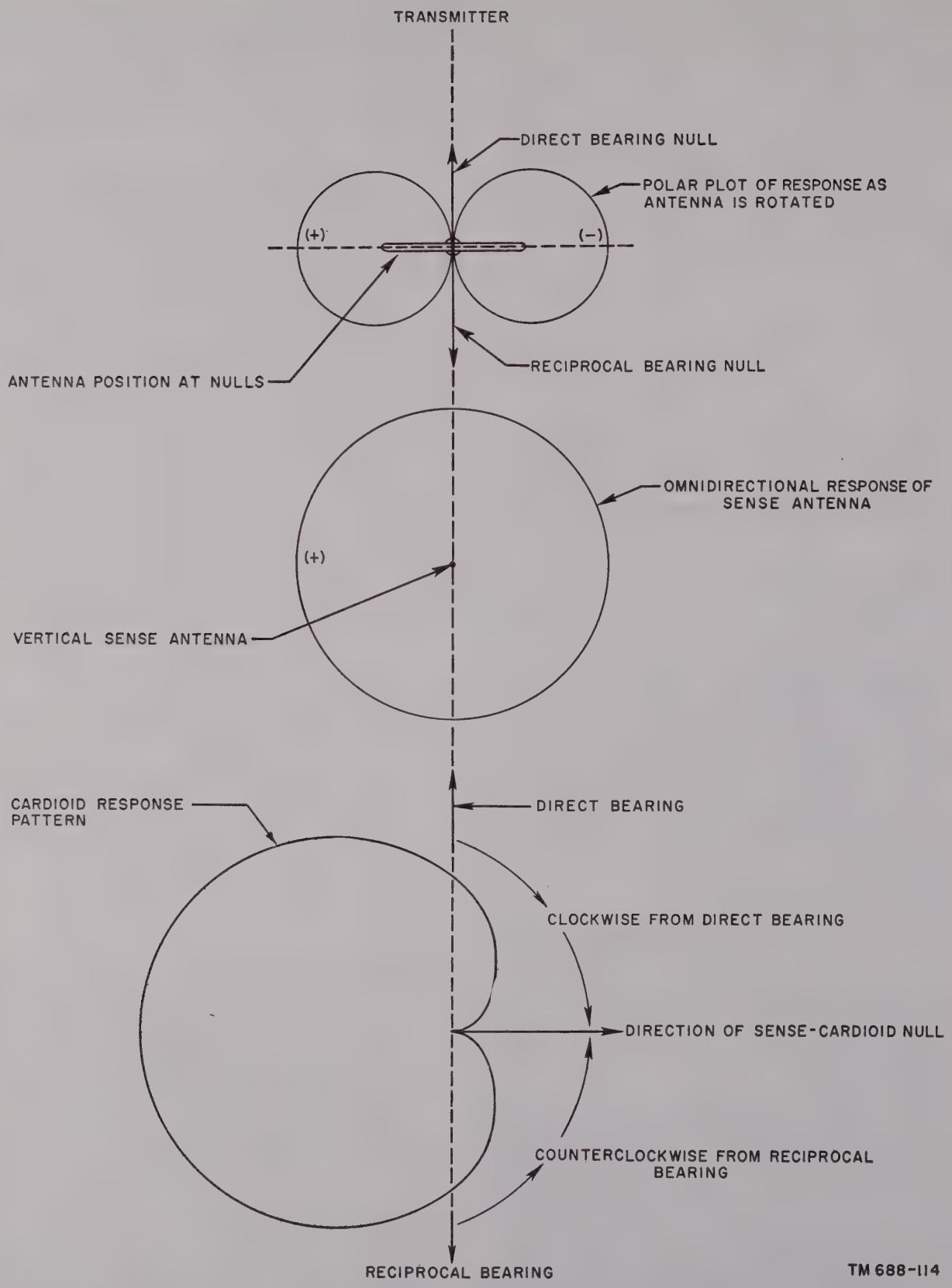

Figure 63. Sense process.

amplitude of the signal from the sense antenna is made equal to the amplitude of the signal from the single-loop antenna by adjusting the sense gain control on the rf amplifier.

121. Theory of Operation (Single-Loop Antenna)

a. As mentioned in paragraph 119*b*, the handwheel on the rf amplifier is rotated until a null or minimum loudspeaker output is obtained. Rotating the handwheel also rotates the azimuth scale on the rf amplifier. The rf amplifier azimuth scale is calibrated in degrees and the bearing can be read on either a red or a white scale. The two readings differ by 180°.

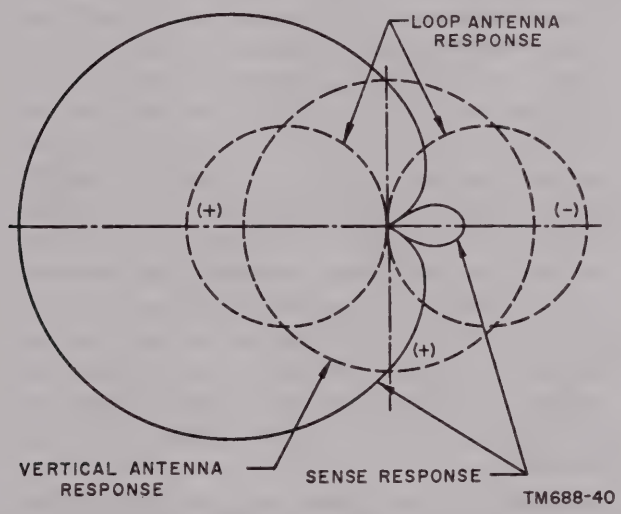

Figure 64. Development of response pattern for weak vertical antenna response and strong loop antenna response.

b. The handwheel is rotated until a null is obtained (A, fig. 67) and the bearing is noted on the white scale (10°). The handwheel is rotated approximately 90° in the direction of an increasing azimuth reading on the white scale (100°), and the sense switch on the rf amplifier is pressed to the sense white position. In the sense white position of the sense switch, the output from the sense antenna is combined with the output from the single-loop antenna and the position of the resultant cardioid pattern is as shown in B, figure 67. In the sense white position, the null of the cardioid pattern is away from the transmitter. Therefore, the output from the loudspeaker will be maximum. When the sense switch is pressed to the sense red position (C, fig. 67), the connections from

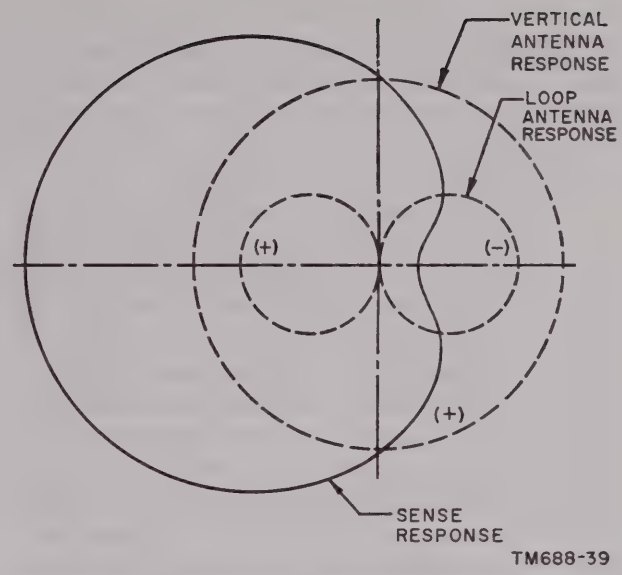

Figure 65. Development of response pattern for strong vertical antenna response and weak loop antenna response.

the single-loop antenna to coupling transformer T206 (fig. 60) are reversed and the phase of the lobes of the figure-eight response pattern are reversed. The output from the single-loop antenna is again combined with the output from the sense antenna and the resulting cardioid pattern assumes the position shown in C, figure 67. When the sense switch is in the sense red position, the null of the cardioid pattern is in the direction of the transmitter and the loudspeaker output will be minimum. The posi-

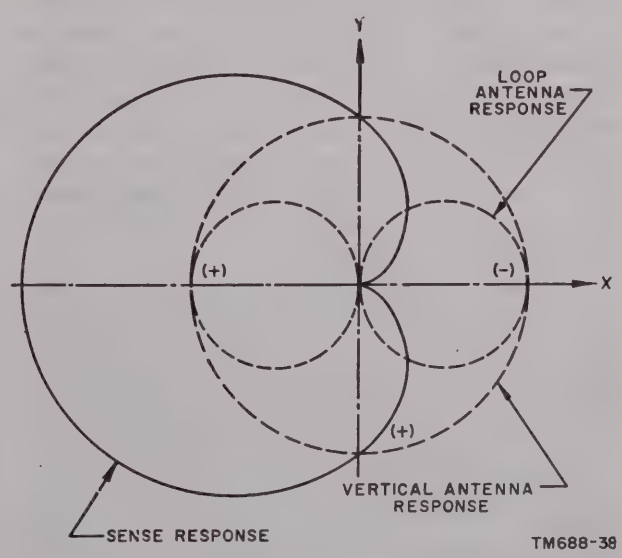

Figure 66. Development of ideal cardioid response pattern.

tion of the sense switch when minimum output is obtained determines which scale is read. In this illustration, minimum output would be obtained on the sense red position. Therefore, the reading on the red scale at the null position (190°) would be the direct bearing.

c. If the loop had been rotated 180° from the position shown in A, figure 67, a null would have been obtained at readings of 10° on the red scale and 190° on the white scale. The sensing procedure, however, would have indicated a reading on the white scale and the same direct bearing would have been indicated. Regardless of the position of the loop when the null is obtained, the sensing procedure indicates on which scale the direct bearing is indicated.

d. To obtain the ideal cardioid response pattern (fig. 66), the amplitude of the signal from the sense antenna is made equal to the amplitude of the signal from the single-loop antenna by adjusting the SENSE GAIN control on the rf amplifier. With the sense switch in the position of minimum output (*b* above), the SENSE GAIN control is adjusted for minimum output from the loudspeaker.

122. Crossed-Loop Antenna

a. Antenna AT–297/TRD–4A (crossed-loop antenna) is installed on the roof of the shelter and can be used during aural-null or visual operation. The crossed-loop antenna consists of two diamond-shaped, vertically polarized, single-loop antennas installed with their planes at right angles to each other (A, fig. 62). When properly oriented (par. 46), one loop exhibits a figure-eight response pattern with its maximums in the north-south direction and the other loop exhibits a figure-eight response pattern with its maximums in the east-west direction. Virtual rotation (par. 118) is accomplished by using the two fixed loops in combination with a signal goniometer.

b. When ANT. SELECT. switch S201 (fig. 133) is in the CROSSED LOOP position, the north-south loop is terminated in R215 and R216 connected in series, the east-west loop is terminated in R217 and R218 connected in series. The north arm of the north-south loop is connected to J201 and the south arm is connected to J202. The east arm of the east-west loop is connected to J203 and the west arm is connected to J204. When crossed-loop operation is desired, J201, J202, J203, and J204 are connected by color-coded coaxial cables to the signal goniometer.

c. The output from the north-south loop is connected to one of the stator windings in the signal goniometer. The output from the east-west loop is connected to the other stator winding. The current flow through the two perpendicular stator windings set up a resultant field within the signal goniometer that corresponds in direction to the direction of arrival of the signal. If the rotor of the signal goniometer is parallel to the resultant field within the goniometer, maximum voltage is induced in the rotor. If the rotor is perpendicular to the resultant field, minimum voltage is induced in the rotor. When the rotor is rotated through 360°, there are two positions of the rotor in which maximum rotor output is obtained and two positions in which minimum rotor output is obtained. The rotor output is represented in figure 68 as a figure-eight response pattern. The nulls of the figure-eight response pattern represent the rotor output when the rotor is perpendicular to the resultant field and the maximums represent the rotor output when the rotor is parallel to the resultant field. As the rotor is rotated through a null position, the phase of the output changes as indicated by the positive and negative signs on the figure-eight rotor output pattern shown in figure 68.

d. During visual operation, the rotor of the signal goniometer is rotated continuously by a drive motor and the direction of arrival of the signal is indicated by a propeller-shaped pattern (bearing pattern, A, fig. 3) presented on the screen of a 5-inch cathode-ray tube. The development of the bearing pattern is discussed in paragraph 138. The bearing pattern is bidirectional; that is, the tips of the propeller point to the reciprocal bearing and the direct bearing. A sensing procedure is required to distinguish the two bearings.

e. During aural-null operation, the rotor of the signal goniometer is turned by the goniometer drive bearing indicator scale until a null in the loudspeaker output is obtained. There are two positions of the rotor in which a null in the loudspeaker output will be obtained. These two positions correspond to the direct bearing and the reciprocal bearing. A sensing procedure is also required in this mode of operation.

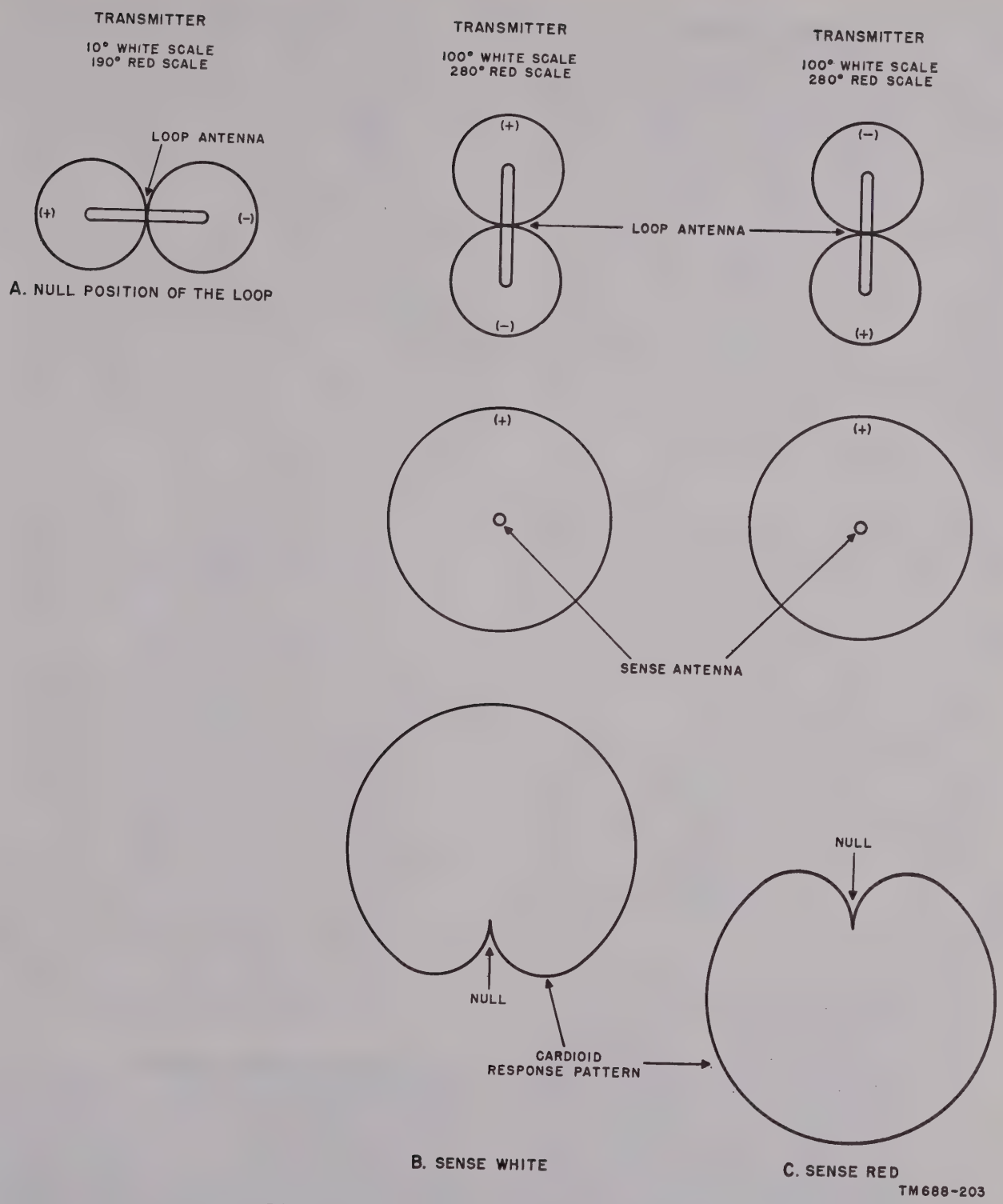

Figure 67. Sensing using the single-loop antenna.

123. Phantom Sense Antenna

a. A sense-finding signal can be derived from a crossed-loop antenna without the use of an auxiliary sense antenna. The sense signal is obtained by taking a portion of the voltage from each loop leg and combining these four voltages additively. The resultant response pattern of this phantom sense antenna is identical with the omnidirectional response pattern of the separate sense antenna used with the single-loop antenna (fig. 59). The omnidirectional response of the phantom sense antenna is shifted in phase and combined with the signal goniometer rotor output to produce the cardioid pattern illustrated in figure 68. The phantom sense circuits are contained in the signal goniometer and discussed in paragraph 129.

b. During visual operation, when the sense signal is combined with the signal goniometer rotor output, the bearing pattern changes to a sense pattern (B, fig. 3). The sense pattern is an arrowhead and the arrow points to the direct bearing which is read on the alidade scale surrounding the screen of the cathode-ray tube. The development of the sense pattern is discussed in paragraph 139.

c. The goniometer drive bearing indicator scale, which is rotated to rotate the rotor of the signal goniometer during aural-null operation, has two scales calibrated in degrees. One of the degree readings is in red and the other is in white. The two readings differ by 180°. The sensing procedure illustrated in figure 68 determines on which scale the direct bearing is read.

(1) In A, figure 68, the rotor of the signal goniometer is positioned for zero output. A reading of 20° is indicated on the white scale and a reading of 200° is indicated on the red scale. When the omnidirectional response of the phantom sense antenna is added to the rotor output, the null of the resultant cardioid pattern produced is 90° clockwise from the null of the rotor output.

(2) In B, figure 68, the rotor of the signal goniometer is also positioned for zero output on the same transmitter signal by rotating the rotor 180° from the position established in A. In this position of the rotor, a reading of 200° is indicated on the white scale and a reading of 20° is indicated on the red scale. When the omnidirectional response of the phantom sense antenna is added to the rotor output, the null of the resultant cardioid pattern is 90° counterclockwise from the null of the rotor output.

d. After obtaining the null, and adding the sense voltage, the rotor of the signal goniometer is rotated in a clockwise direction (direction of an increasing azimuth). If the strength of the signal decreases as the rotor is rotated in a clockwise direction, the direct bearing is indicated on the white scale. If the strength of the signal increases as the rotor is rotated in a clockwise direction, the direct bearing is indicated on the red scale.

(1) In A, figure 68, clockwise rotation of the rotor is approaching the null of the cardioid pattern and the strength of the signal would decrease. The decrease in signal strength is an indication that the direct bearing is indicated on the white scale (20°).

(2) In B, figure 68, clockwise rotation of the rotor is approaching the maximum of the cardioid pattern and the strength of the signal would increase. The increase in signal strength is an indication that the direct bearing is indicated on the red scale (20°).

(3) In both of the two possible null positions of the rotor, the same direct bearing was indicated. That is, the sensing procedure distinguishes the direct bearing from the reciprocal bearing by determining on which scale the direct bearing is read.

124. Adcock Antenna System

a. The Adcock antenna system supplied with Direction Finder Set AN/TRD–4A consists of two vertically polarized U Adcock antennas (par. 117*d*) installed with their planes at right angles to each other (B, fig. 62). Each U Adcock antenna consists of two vertically polarized monopoles; therefore, the Adcock antenna system consists of four vertically polarized monopoles. The four monopoles are erected in a square over a wire mesh counterpoise which assures uniform ground conductivity for each

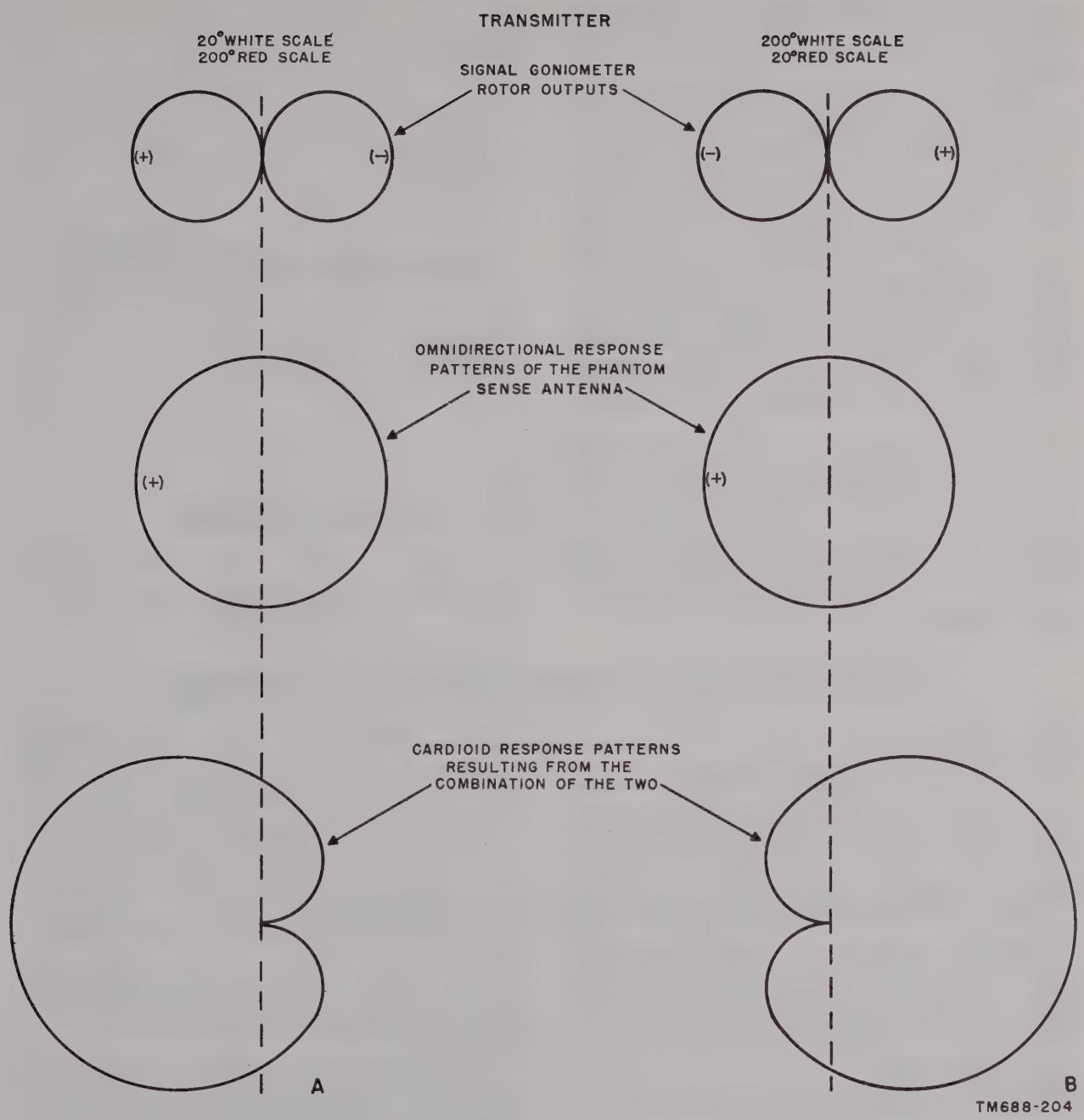

Figure 68. Sensing during aural-null operation using either the crossed-loop or Adcock antenna.

monopole. The spacing between monopoles and the height of each monopole is determined by the frequency range to be covered (fig. 5).

b. The Adcock antenna system is located approximately 140 feet from the shelter and the output from each of the four monopoles is connected to the shelter by a color-coded coaxial cable. When properly oriented (par. 39), two monopoles comprise the north-south figure-eight antenna corresponding to the north-south loop of the crossed-loop antenna and the other two monopoles comprise the east-west figure-eight antenna corresponding to the east-west loop of the crossed-loop antenna (fig. 62). Vir-

tual rotation is accomplished by use of the same signal goniometer used with the crossed-loop antenna.

c. Each monopole is a four-section mast called Antenna AS–533/GR which consists of the items illustrated in figure 6. Each monopole is terminated in two resistors R102 and R103 connected in series (fig. 69). The antenna terminating resistors are located in the antenna coupler unit which is part of the monopole. The portion of each monopole output developed across resistor R103 is connected by color-coded coaxial cable to the signal goniometer. The cabling from the Adcock antenna system to the signal goniometer is illustrated in figure 138.

d. The theory of obtaining the direct bearing on a transmitter by using the Adcock antenna system is identical with the theory using the crossed-loop antenna as discussed in paragraph 122. Phantom sensing is obtained by taking a portion of the signal from each of the four monopoles (par. 123).

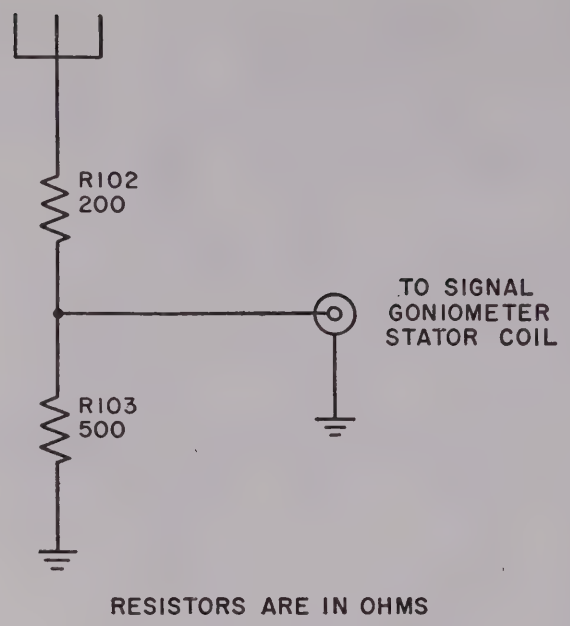

TM 688-83

Figure 69. Adcock antenna coupler unit, schematic diagram.

Section IV. THEORY OF GONIOMETER DRIVE MX–1170/GRD

125. General

Goniometer Drive MX–1170/GRD is located in the top compartment of the electrical equipment cabinet (fig. 13). It is the assembly that provides the means for turning the bearing indicator scale on the goniometer drive and the rotors of both the signal goniometer and the indicator goniometer. The unit houses the drive motor (par. 126), the drive assembly (par. 127), the signal goniometer (par. 129), and the indicator goniometer (par. 130).

126. Drive Motor
(fig. 124)

a. Drive motor B701 is a $\frac{1}{15}$-horsepower, induction-type motor that drives the bearing indicator scale on the goniometer drive and the rotors of both the signal goniometer and the indicator goniometer through a belt and pulley arrangement. The drive motor operates from a 115-volt, 60-cps, single-phase ac power source.

b. The ac power required to operate the drive motor is applied between pins B and E of P701 (fig. 124). The 115 volts are applied across the perpendicular stator windings of the motor. Capacitor C701 is in series with one of the windings and its reactance causes a phase shift in the current flow through this winding with respect to other winding. A phase difference in current flow through the two windings produces a rotating magnetic field that starts the motor. Capacitor C702, which is connected in parallel with C701 when the GONIO DRIVE-COLD START switch is placed in the COLD START position, increases the current flow through the field winding to increase the starting torque.

c. The power which operates the drive motor comes from the azimuth indicator. The 115-volt output from the junction box is connected to power jack P302 on the azimuth indicator (fig. 93). The ac power required to operate the drive motor is applied through MAIN POWER switch S303 and INDICATOR switch S304. One side of the ac line is connected through time lag fuse F301 to pin E of goniometer drive jack J304. The other side of the ac line is connected through GONIO DRIVE switch S302 to pin B of J304. Cable W701 connects J304 on the azimuth indicator to P701 on the goniometer drive. When the MAIN

POWER, INDICATOR, and GONIO DRIVE switches are in the ON positions, 115 volts are applied to pins B and E of P701. Thus all three switches must be in the ON positions before the drive motor will operate.

d. Filament voltage (6.4 volts) is required to light the bearing indicator dial lights. The 6.4 volts are obtained from pins 6 and 8 of transformer T306 which is located in the azimuth indicator (fig. 93). Terminal 6 of T306 is connected to D of J304 and terminal 8 of T306 is connected to C of J304. The 6.4 volts are connected by cable W701 to pins C and D of P701 and to dial lights E701 and E702. The dial lights light when the MAIN POWER and INDICATOR switches are in the ON positions.

127. Drive Assembly
(fig. 70)

a. The drive assembly is the assembly that provides mechanical coupling from the drive motor to the bearing indicator scale on the goniometer drive and the rotors of the signal and the indicator goniometer. The shaded portions of figure 70 illustrate the moving parts of the drive assembly which are supported from the housing by two ball bearings. Two goniometer locking nuts on each side of the drive housing lock the goniometer housings to the drive housing.

b. A belt connects the drive motor output from the motor pulley to the drive pulley. The bearing indicator scale and two drive disks are connected to and driven by the drive pulley. The azimuth is indicated on the bearing indicator scale. One of the drive disks drives the shaft on which the signal goniometer rotor is wound. The other drive disk drives the shaft on which the rotor of the indicator goniometer is wound. Each of the drive disks has a slot and each of the goniometer shafts has a plunger which fits into the slot in the drive disk.

Note.—When changing or installing either goniometer, be sure that the plunger on the goniometer shaft is inserted in the slot on the drive disk.

c. In addition to the components required to drive the goniometer rotors and the bearing indicator scale, the drive assembly consists of components which provide for alignment of the goniometer housings and alignment of the bearing indicator scale.

(1) A swivel mounting plate allows the housing of the signal goniometer to be positioned relative to the housing of the indicator goniometer so that the presentation on the cathode-ray tube gives the correct azimuth (pars. 48 and 49). A SWIVEL PLATE LOCK (fig. 43) locks the signal goniometer housing in position.

(2) A movable engraved index marker provides for orienting the bearing indicator scale to read the correct bearing (par. 50). An INDEX LOCK (fig. 43) locks the engraved index marker in position.

Section V. THEORY OF ELECTRICAL GONIOMETERS GO–5/GRD AND GO–6/GRD

128. General

a. The term goniometer, as used in direction finding, is a device that provides for virtual rotation of large fixed antenna systems such as the crossed-loop or Adcock antenna. The signal goniometer resolves the signal from the north-south figure-eight antenna and the signal from the east-west figure-eight antenna into one signal that is fed to the df receiver. The indicator goniometer resolves the signal from the df receiver back into two components that are fed to the horizontal and vertical deflection plates of the cathode-ray tube.

b. Two goniometers are available to be used as signal goniometers. Electrical Goniometer GO–5/GRD is used as the signal goniometer to obtain bearings on signals in the frequency range of .54 to 10 mc. Electrical Goniometer GO–6/GRD is used as the signal goniometer to obtain bearings on signals in the frequency range of 8 to 30 mc. The signal goniometer is mounted on the right side of the drive housing (fig. 70). Electrical Goniometer GO–5/GRD is used as the indicator goniometer and is mounted on the left side of the drive housing (fig. 70).

c. Both goniometers have two stator windings and one rotor winding. The stator windings are arranged at right angles to each other so that the coupling between the two is minimum. The coupling between the stator windings and the rotor windings depends on the position

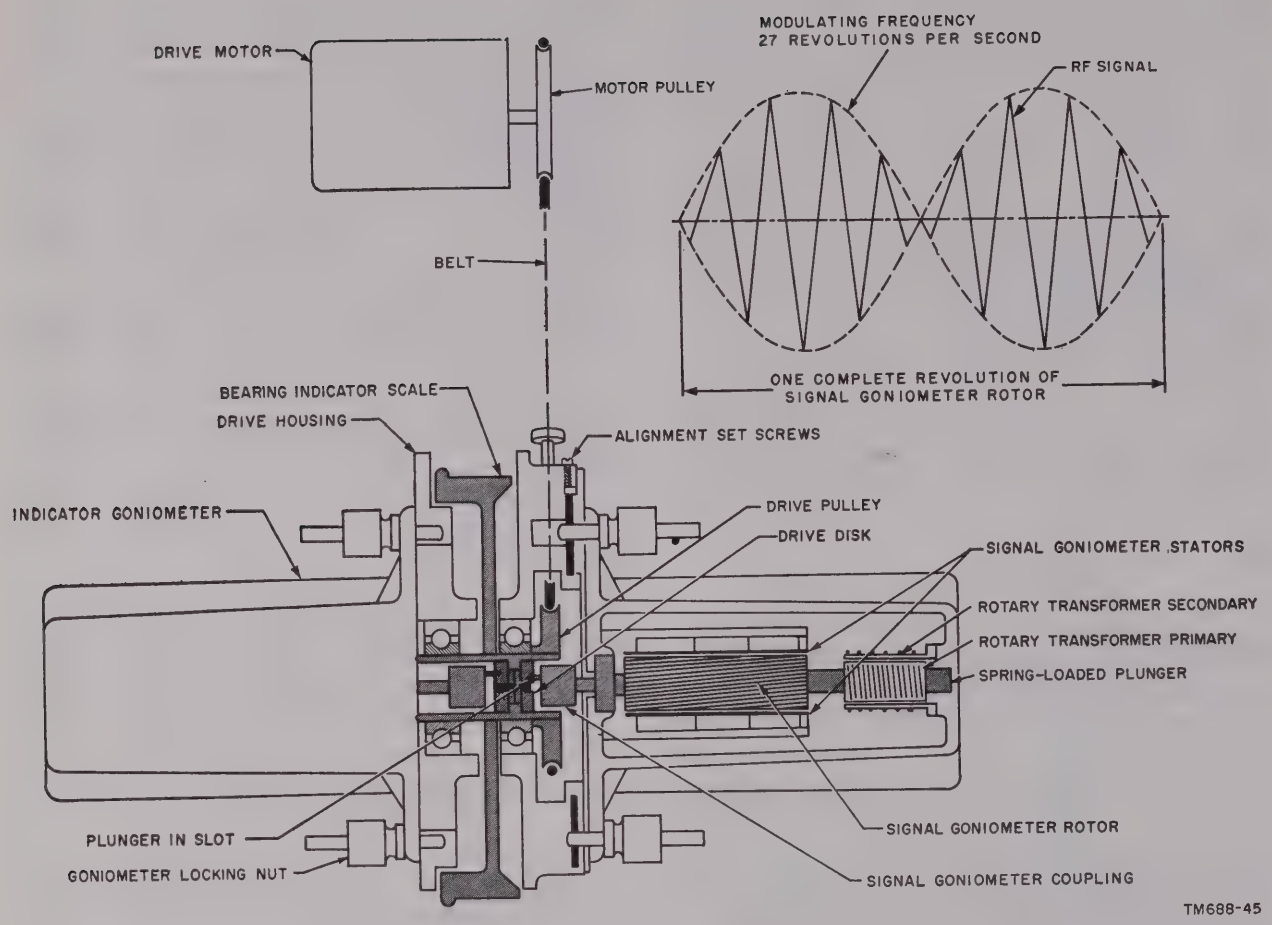

Figure 70. Rf signal modulated by rotation of the signal goniometer and sectional view of goniometers and goniometer drive.

of the rotor winding which is either rotated by hand or driven by the drive motor. Electrical Goniometers GO–5/GRD and GO–6/GRD differ basically in the number of turns on the rotor and stator windings.

129. Signal Goniometers

a. The output from the north-south figure-eight antenna is connected to one of the stator windings on the signal goniometer and the output from the east-west figure-eight antenna is connected to the other stator winding. When a signal arrives at the antenna, the resultant magnetic field in the signal goniometer is composed of two components. One component is the result of the current flow through the stator winding connected to the north-south antenna, and the other component is the result of the current flow through the stator winding connected to the east-west antenna.

(1) If the signal were to arrive from either north or south, the output from the north-south antenna would be maximum and the output from the east-west antenna would be minimum. The resultant magnetic field within the goniometer would be parallel to the stator winding connected to the north-south antenna, or in the goniometer north-south plane.

(2) If the signal were to arrive from either northeast or southwest, the output from the east-west antenna would be equal to the output from the north-south antenna. The resultant magnetic field within the goniometer would have two components, a magnetic field parallel to each of the two stator windings. The resultant mag-

netic field would be in the goniometer northeast-southwest plane.

Note.—The position, not the direction, of the resultant magnetic field within the goniometer is given and the position of the field is a function of the direction of arrival of the signal.

b. During visual operation, the rotor of the signal goniometer is rotated by the drive motor at a speed of 27 revolutions per second. When the rotor is parallel to the resultant magnetic field within the goniometer, maximum voltage will be induced in the rotor. When the rotor is perpendicular to the resultant magnetic field within the goniometer, minimum voltage will be induced in the rotor. For one complete revolution of the rotor, there are two positions in which the rotor will be parallel to the resultant magnetic field. The result of turning the rotor in the field is to amplitude-modulate the rf signal as illustrated in figure 70. The envelope of the rf signal is twice the modulating frequency or 54 cps. The rotor position at which nulls and peaks are obtained depends on the direction of arrival of the signal.

c. A rotary transformer is used to couple the output from the rotor of the signal goniometer to the df receiver. The rotor winding (primary) of the rotary transformer is wound on the same shaft as the rotor winding of the signal goniometer (fig. 70) and the two rotor windings are connected together. The stator winding (secondary) and the rotor winding (primary) of the rotary transformer are coaxial, therefore, the degree of coupling between the primary winding and the secondary winding does not change when the primary winding is rotated. The signal goniometer output is taken from the stationary secondary winding of the rotary transformer. The use of the rotary transformer eliminates the use of slip rings or another form of movable coupling to the rotor of the signal goniometer.

130. Indicator Goniometer

The rf input to the indicator goniometer is amplitude-modulated by the amplified envelope of the rf output from the signal goniometer. The indicator goniometer input is applied through a rotary transformer (par. 129*c*) to the rotor of the indicator goniometer. Two outputs are obtained, one from each of the stator windings in the indicator goniometer. The output from one stator winding is applied to the vertical deflection plates of the cathode-ray tube, and the output from the other is applied to the horizontal deflection plates. A detailed discussion of the patterns obtained on the cathode-ray tube screen is contained in paragraphs 137 through 139. The rotors of signal goniometer and the indicator goniometer are driven by the same drive motor. The position of the indicator goniometer rotor therefore corresponds to the position of the signal goniometer rotor.

131. Electrical Goniometer GO–5/GRD (fig. 125)

a. Signal Goniometer. Electrical Goniometer GO–5/GRD is used as the signal goniometer when the signal is in the frequency band of .54 to 10 mc.

(1) The output of the east-west antenna is applied through connectors J401 and J402 to stator winding L401. The 51-ohm resistor R405 connects the midpoint of the stator winding through the contacts of relay K401 to ground. The output of the north-south antenna is applied through connectors J403 and J404 to stator winding L402. The 51-ohm resistor R406 connects the midpoint of L402 through the contacts of relay K401 to ground. The centers of the east-west winding and the north-south winding are connected to ground when relay K401 is deenergized to prevent coupling between the two windings. Damping resistors R401, R402, R403, and R404 connected in parallel with the stator windings, broaden the frequency response of the goniometer.

(2) The rotor winding is inductively coupled to the stator windings and its output is applied to the primary (rotor) of rotary transformer T401. The rotary transformer secondary (stator) is connected to the goniometer output connector J405.

(3) When relay K401 is energized, equal portions of signal from each antenna are fed through sense phasing capacitor C404 to connector J405. Capacitor C403 also aids in properly phasing the

sense voltage. When SENSE switch S401 is in the LOOPS position, R407 is in parallel with C404 to provide proper phasing of the sense voltage for crossed-loop operation. Relay K401 is energized when the SENSE switch on the azimuth indicator is depressed. The 115 volts required to energize the relay are applied through connector P401. Capacitors C401 and C402 filter the ac input to the relay.

b. Indicator Goniometer. Electrical Goniometer GO–5/GRD is the only goniometer provided with Direction Finder Set AN/TRD–4A that can be used as the indicator goniometer.

(1) The sense circuits are not used when Electrical Goniometer GO–5/GRD is used as the indicator goniometer. There is no connection to connector P401 and relay K401 is de-energized.

(2) The input is applied to connector J405, and the output is taken from the stator windings. The output from L401 between J401 and J402 is cabled to the azimuth indicator and connected through the vertical channel to the vertical deflection plates. The output from L402 between J403 and J404 is cabled to the azimuth indicator and connected through the horizontal channel to the horizontal deflection plates.

(3) SENSE switch S401 is not used when the goniometer is used as the indicator goniometer.

132. Electrical Goniometer GO–6/GRD (fig. 126)

Electrical Goniometer GO–6/GRD is used as the signal goniometer when the signal is in the frequency band of 8 to 30 mc.

a. The output from the east-west antenna is applied through connectors J501 and J502 to stator winding L501. The 51-ohm resistor R505 connects the midpoint of the stator winding through the contacts of relay K501 to ground. The output of the north-south antenna is applied through connectors J503 and J504 to stator winding L502. The 51-ohm resistor R506 connects the midpoint of L502 to ground through the contacts of relay K501. The centers of the east-west and the north-south windings are connected to ground when relay K501 is de-energized to prevent coupling between the two windings. Damping resistors R501, R502, R503, and R504 connected in parallel with the stator windings, broaden the frequency response of the goniometer.

b. The rotor winding of the goniometer is directly coupled to the primary (rotor) of rotary transformer T501. The rotary transformer secondary (stator) is connected to the goniometer output jack J505.

c. When relay K501 is energized, equal portions of signal from each antenna are fed to the goniometer output connector J505 as sense voltage. When SENSE switch S501 is in the ADCOCK position, sense voltage is applied through sense phasing resistor R508. When S501 is in the LOOPS position, L503 is added in series with R508 to provide proper phasing of the sense voltage for crossed-loop operation.

d. Relay K501 is energized when the SENSE switch on the azimuth indicator is depressed. The 115 volts required to energize the relay are applied through connector P501. Capacitors C501 and C502 filter the ac input to the relay.

Section VI. THEORY OF RADIO RECEIVER R–390/URR

133. General

a. General. Three Radio Receivers R–390/URR are provided with Direction Finder Set AN/TRD–4A. One of the receivers is used as the direction-finder receiver, one is used as an intercept receiver, and the other is used as a communication receiver. A block diagram discussion of the receiver is contained in paragraph 134, complete instructions for the installation, operation and maintenance of Radio Receiver R–390/URR are contained in TM 11–856.

b. Direction Finder Receiver. Radio Receiver R–390/URR located in the bottom compartment of Electrical Equipment Cabinet CY–1426/U (19, fig. 19) is used as the df receiver. The df receiver selects the signal whose direction of arrival is to be determined, amplifies the signal, and in aural operation detects the signal. The input to the df receiver comes from either the

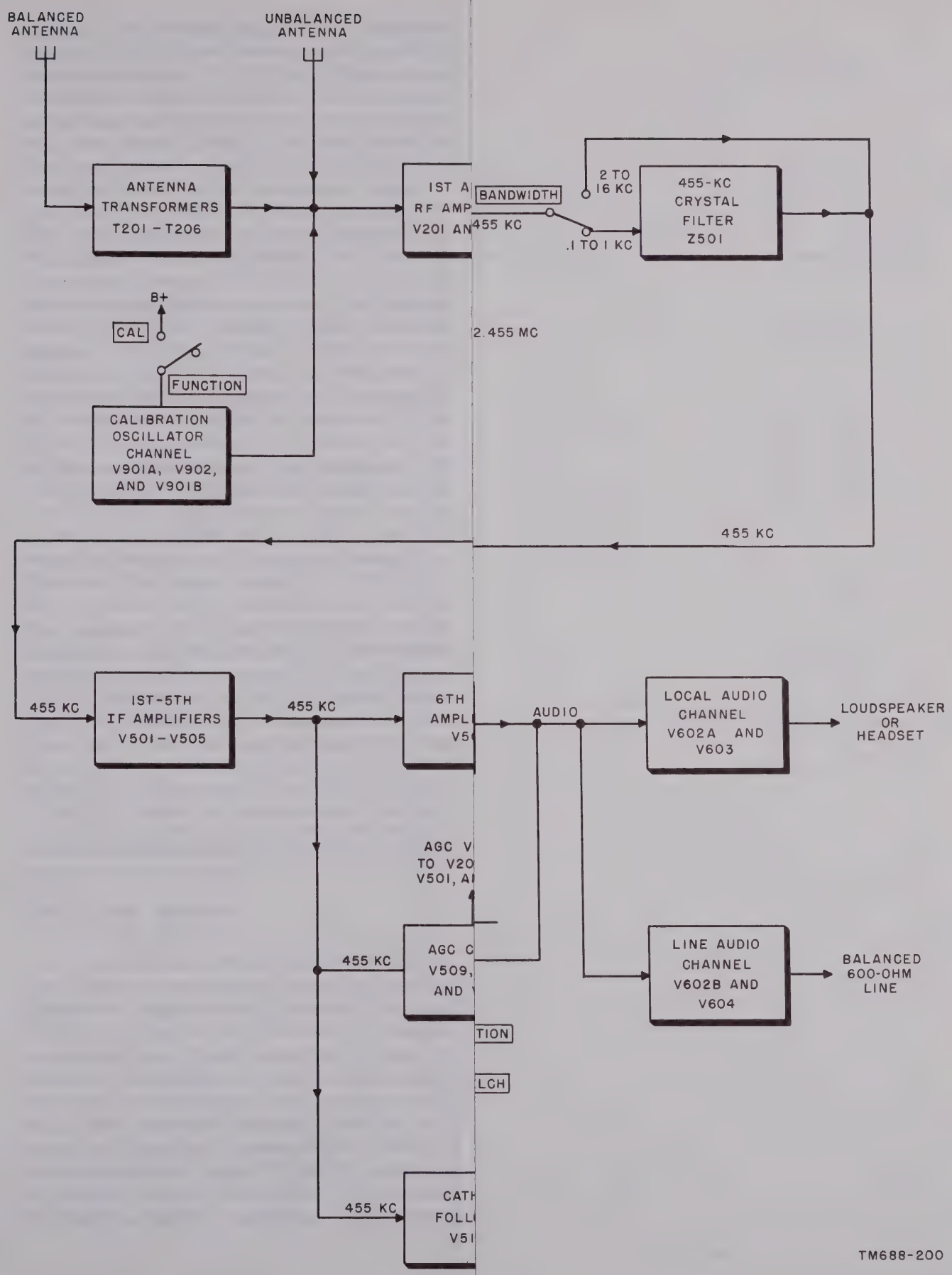

428027 O - 57 (Face p. 120)

sense voltage. When SENSE switch S401 is in the LOOPS position, R407 is in parallel with C404 to provide proper phasing of the sense voltage for crossed-loop operation. Relay K401 is energized when the SENSE switch on the azimuth indicator is depressed. The 115 volts required to energize the relay are applied through connector P401. Capacitors C401 and C402 filter the ac input to the relay.

b. Indicator Goniometer. Electrical Goniometer GO–5/GRD is the only goniometer provided with Direction Finder Set AN/TRD–4A that can be used as the indicator goniometer.

(1) The sense circuits are not used when Electrical Goniometer GO–5/GRD is used as the indicator goniometer. There is no connection to connector P401 and relay K401 is de-energized.

(2) The input is applied to connector J405, and the output is taken from the stator windings. The output from L401 between J401 and J402 is cabled to the azimuth indicator and connected through the vertical channel to the vertical deflection plates. The output from L402 between J403 and J404 is cabled to the azimuth indicator and connected through the horizontal channel to the horizontal deflection plates.

(3) SENSE switch S401 is not used when the goniometer is used as the indicator goniometer.

132. Electrical Goniometer GO–6/GRD (fig. 126)

Electrical Goniometer GO–6/GRD is used as the signal goniometer when the signal is in the frequency band of 8 to 30 mc.

a. The output from the east-west antenna is applied through connectors J501 and J502 to stator winding L501. The 51-ohm resistor R505 connects the midpoint of the stator winding through the contacts of relay K501 to ground. The output of the north-south antenna is applied through connectors J503 and J504 to stator winding L502. The 51-ohm resistor R506 connects the midpoint of L502 to ground through the contacts of relay K501. The centers of the east-west and the north-south windings are connected to ground when relay K501 is de-energized to prevent coupling between the two windings. Damping resistors R501, R502, R503, and R504 connected in parallel with the stator windings, broaden the frequency response of the goniometer.

b. The rotor winding of the goniometer is directly coupled to the primary (rotor) of rotary transformer T501. The rotary transformer secondary (stator) is connected to the goniometer output jack J505.

c. When relay K501 is energized, equal portions of signal from each antenna are fed to the goniometer output connector J505 as sense voltage. When SENSE switch S501 is in the ADCOCK position, sense voltage is applied through sense phasing resistor R508. When S501 is in the LOOPS position, L503 is added in series with R508 to provide proper phasing of the sense voltage for crossed-loop operation.

d. Relay K501 is energized when the SENSE switch on the azimuth indicator is depressed. The 115 volts required to energize the relay are applied through connector P501. Capacitors C501 and C502 filter the ac input to the relay.

Section VI. THEORY OF RADIO RECEIVER R–390/URR

133. General

a. General. Three Radio Receivers R–390/URR are provided with Direction Finder Set AN/TRD–4A. One of the receivers is used as the direction-finder receiver, one is used as an intercept receiver, and the other is used as a communication receiver. A block diagram discussion of the receiver is contained in paragraph 134, complete instructions for the installation, operation and maintenance of Radio Receiver R–390/URR are contained in TM 11–856.

b. Direction Finder Receiver. Radio Receiver R–390/URR located in the bottom compartment of Electrical Equipment Cabinet CY–1426/U (19, fig. 19) is used as the df receiver. The df receiver selects the signal whose direction of arrival is to be determined, amplifies the signal, and in aural operation detects the signal. The input to the df receiver comes from either the

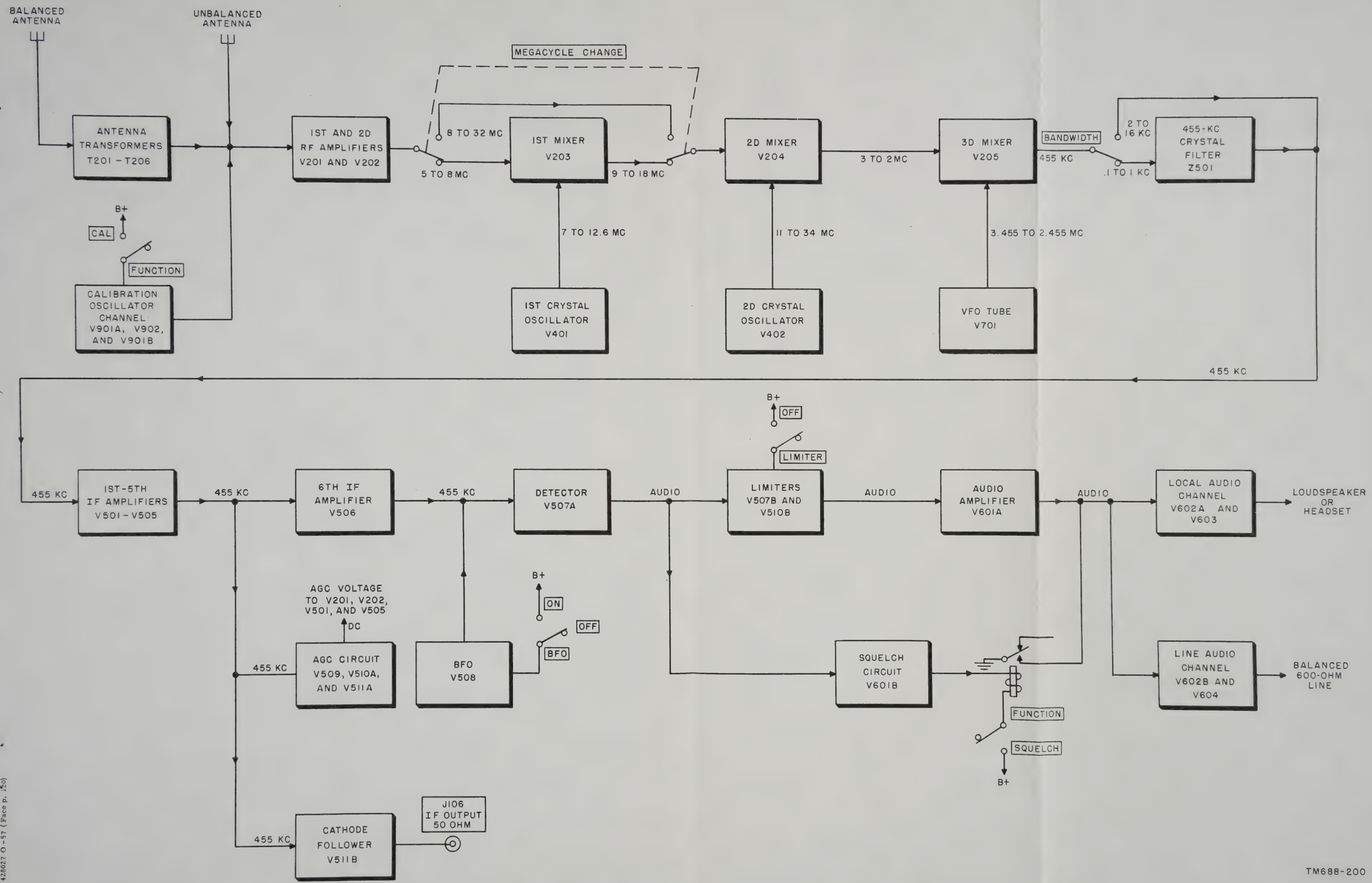

Figure 71. Radio Receiver R-390/URR, block diagram.

428027 O-57 (Face p. 150)

Adcock, the crossed-loop, or the single-loop antenna. The df receiver output is applied to Azimuth Indicator IP–137/GRD. During visual operation, the direction of arrival of the signal is indicated by the presentation on the cathode-ray tube screen. During aural-null operation, the direction of arrival of the signal is indicated by the null in the loudspeaker output.

c. Intercept Receiver. Radio Receiver R–390/URR installed in the cabinet provided with the receiver and located to the left of Electrical Equipment Cabinet CY–1426/U (23, fig. 19) is used as the intercept receiver. The intercept receiver monitors signals in the frequency range of .5 to 32 mc. When a signal is received by the intercept receiver, the frequency is transferred to the df receiver and the direction of arrival of the signal is determined. The input to the intercept receivers comes from one of the two nondirectional whip antennas. The intercept receiver output is applied to headsets.

d. Communication Receiver. Radio Receiver R–390/URR installed in the cabinet provided with the receiver and located to the right of Electrical Equipment Cabinet CY–1426/U (18, fig. 19) is used as the communication receiver. The communication receiver provides for the reception of information from the intelligence center. An auxiliary transmitter may be used to send information to the intelligence center. The input to the communication receiver comes from one of the two nondirectional whip antennas. The communication receiver output is applied to Loudspeaker LS–166/U (10, fig. 19).

Note.—The location of the communication and intercept receivers relative to the electrical equipment cabinet may be exchanged and the output of either may be connected to the loudspeaker.

134. Block Diagram
(fig. 71)

a. General. Radio Receiver R–390/URR provides for the reception of voice, cw, or frequency-shift signals over a frequency range of .5 to 32 mc. The receiver is basically a multiple conversion type. Triple conversion is used for the lower frequencies (.5 to 8 mc) and double conversion for the higher frequencies (8 to 32 mc). The receiver operates from a self-contained power supply designed to operate at a nominal input of either 115 or 230 volts over a frequency range of 48 to 62 cps. Instructions for the installation, operation, maintenance, and repair of Radio Receiver R–390/URR are contained in TM 11–856.

b. Antenna Transformers. When the receiver is used as the df receiver, the input to the receiver comes from balanced antennas (Adcock or crossed-loop). When balanced antennas are used, the signals from the antenna must pass through an antenna transformer. The purpose of the antenna transformer is to match the impedance of the balanced antenna to the characteristic input impedance of the first rf amplifier. The antenna transformer circuit covers the frequency range of .5 to 32 mc in six bands, as follows: .5 to 1 mc, 1 to 2 mc, 2 to 4 mc, 4 to 8 mc, 8 to 16 mc, and 16 to 32 mc. The transformer used for each band is selected by operation of the MEGACYCLE CHANGE control.

c. Rf Amplifiers. As in *b* above, when balanced antennas are used, the antenna output is transformer-coupled to the grid of the first rf amplifier. When unbalanced antennas are used, the antenna output is capacitively coupled to the grid of the first rf amplifier. Unbalanced (whip) antennas are used when the receiver is functioning as the intercept receiver or the communication receiver. The first rf amplifier V201 and the second rf amplifier V202 amplify rf signals in the frequency range of .5 to 32 mc before applying them to the mixer circuits. The gain of both rf amplifier stages is controlled manually by the RF GAIN control and automatically by agc circuits. The output of the second rf amplifier is coupled to either the first mixer or the second mixer, depending on the frequency of the signal. For signals in the .5- to 8-mc band, the output of the second rf amplifier is fed to the first mixer. For signals in the 8- to 32-mc band, the output of the second rf amplifier is fed to the second mixer.

d. First Mixer. The .5- to 8-mc output from the second rf amplifier is mixed with the 7- to 12.6-mc output from the first crystal oscillator V401 in the first mixer V203. The frequency of the output from the first mixer stage is variable from 9 to 18 mc and is applied to the second mixer stage.

e. Second Mixer. Depending on the setting of the MEGACYCLE CHANGE control, one input to the second mixer V204 is either the 8- to 32-mc output from the second rf amplifier or the 9- to 18-mc output from the first mixer

stage. The other input to the second mixer stage is the 11- to 34-mc output from the second crystal oscillator V402. The two signals are mixed in the second mixer stage to produce a 3- to 2-mc output that is fed to the third mixer stage. The output from the second mixer stage is labeled 3 to 2 mc to indicate that the higher the frequency of the input, the lower the frequency of the output.

f. Third Mixer. The two inputs to the third mixer V205 are the 3- to 2-mc output from the second mixer stage and the 3.455- to 2.455-mc output from the variable frequency oscillator tube V701. Depending on the position of the BANDWIDTH control, the 455-kc output from the third mixer stage is applied to the first if. amplifier V501 either directly or through crystal filter Z501.

g. If Amplifiers V501–V505. The 455-kc output from the third mixer stage is amplified by five if. amplifier stages. The bandwidth of the if. strip is variable in six steps from .1 to 16 kc by the BANDWIDTH control. The gain of the first and fifth stage is manually controlled by the RF GAIN control and automatically controlled by the agc control. The 455-kc output from the fifth if. amplifier V505 is fed to the sixth if. amplifier V506, cathode follower V511B, and the AGC circuit consisting of V509, V510A, and V511A.

h. Cathode Follower V511B. Cathode follower V511B matches the high output impedance of the fifth if amplifier to the low impedance coaxial cable which couples the if. output from IF OUTPUT 50 OHM jack J106. The if. output available at this jack is coupled to Azimuth Indicator IP–137/GRD when the receiver is used as the df receiver in Direction Finder Set AN/TRD–4A.

i. Agc Circuit. The function of the agc circuit is to provide automatic control of the receiver gain. The agc circuit develops a negative dc potential which is related in amplitude to the strength of the incoming signal. To maintain the receiver output at a constant level regardless of signal-strength variations, this negative potential is applied as bias to the grids of the first and second rf amplifiers and to the grids of the first and fifth if. amplifier.

j. Sixth If Amplifier. The sixth if amplifier V506 is similar in operation to the previous five if. amplifiers. The band pass of this stage is fixed and is sufficient to pass any bandwidth selected in the previous stages. The 455-kc output of the sixth if amplifier is applied to the detector.

k. Detector. The function of the detector V507A is to demodulate the 455-kc input from the sixth if. amplifier. The audio output from the detector is applied to the limiters and to the squelch circuit.

l. Limiters. The function of negative peak limiter V507B and positive peak limiter V510B is to limit the peak amplitude of the detector output to eilminate noise peaks above a certain threshold. Two triodes, connected as diodes, are provided to accomplish limiting of both the positive and negative peaks of the detector output. If operation without limiting is desired, the limiters can be disabled by setting the LIMITER control in the OFF position. In the OFF position of the LIMITER control, B+ is applied to the plates of the diodes and they conduct. The audio signal modulates the direct current (dc) flowing through the diodes and the audio signal is applied to audio amplifier V601A.

m. Audio Amplifier V601A. Audio amplifier V601A amplifies the audio signal from the limiters and applies the signal through a filter circuit to the local audio and line audio channels. The filter circuit appreciably reduces noise and interfering signals providing greater intelligibility of received signals.

n. Local Audio Channel. Local audio amplifier V602A amplifies the audio signal from audio amplifier V601A and applies it to the local audio output stage V603. The local audio output stage amplifies the power of the audio signal from the local audio amplifier to a suitable level for operating either a loudspeaker or a headset.

o. Line Audio Channel. The line audio channel is similar to the local audio channel. Line audio amplifier V602B amplifies the audio signal from audio amplifier V601A and applies it to the line audio output stage V604. The line audio output stage amplifies the power of the audio signal from the line audio amplifier, and is designed to feed a balanced line having an impedance of 600 ohms. The line audio channel also has provisions for monitoring the output level of the channel with the LINE LEVEL meter.

p. Beat Frequency Oscillator. To facilitate accurate tuning of signals and to permit the reading of radiotelegraph signals, bfo V508 is used. When the BFO switch is in the ON position, the bfo generates a signal that is mixed with the 455-kc if signal at the input to detector V507A. The two signals heterodyne to produce an audio beat signal in the audio output of the receiver.

q. Squelch Circuit. In addition to supplying audio signals to the limiters, the detector supplies a signal to the squelch circuit. The squelch circuit is in operation when the FUNCTION switch is in the SQUELCH position. The average dc output of the squelch circuit varies in proportion to the average signal level. When the signal level drops below some predetermined level established by the RF GAIN control, the output from the squelch circuit energizes the squelch relay and grounds the output from audio amplifier V601A to quiet the receiver output.

r. Calibration Channel. The function of the calibration channel is to provide a secondary frequency standard in 100-kc steps in the frequency range of .5 to 32 mc to be used to calibrate Radio Receiver R–390/URR. Calibration oscillator V901A supplies a crystal controlled 1 mc signal to synchronize multivibrator V902. The square-wave output from the mutivibrator contains a large number of harmonics and is capable of supplying all of the calibrating signals required to cover the frequency range of .5 to 32 mc. Buffer amplifier V901B amplifies the output of the multivibrator and isolates the multivibrator from the first rf amplifier. Plate voltage is supplied to the calibration circuit when the FUNCTION switch is in the CAL position.

Section VII. THEORY OF AZIMUTH INDICATOR IP–137/GRD

135. General

Azimuth Indicator IP–137/GRD is located in the middle compartment of the electrical equipment cabinet (fig. 13). It utilizes a cathode-ray tube for visually indicating the direction of arrival of a radio signal, and a loudspeaker for aurally indicating the direction of arrival of a radio signal.

a. Visual. A visual indication of the direction of arrival of a signal is presented on a 5-inch cathode-ray tube screen that is surrounded by a lighted azimuth scale. Transmitter bearings are indicated on the cathode-ray tube by a propeller-shaped pattern called a bearing pattern (A, fig. 3). The azimuth positions of the propeller tips are the reciprocal and direct bearings of the transmitter. Sensing is the procedure through which the direct and reciprocal bearings are distinguished from each other. The sense pattern is a folded propeller (B, fig. 3) and the direct bearing is indicated by the azimuth to which the arrowhead is pointing. The bearing is read directly from the azimuth scale, which is calibrated in degrees.

b. Aural. A loudspeaker on the front panel of the azimuth indicator is used to determine the direction of arrival of radio signals during aural-null operation. Either the bearing indicator scale located on the goniometer drive or the hand wheel located on the rf amplifier is rotated until an aural null is obtained from the loudspeaker. During aural-null operation, the bearing readings are taken from either the bearing indicator scale on the goniometer drive or the azimuth scale on the rf amplifier.

136. Block Diagram
(fig. 72)

a. If Amplifier. The modulated 455-kc if output signal from the df receiver is fed to if amplifier V301. The signal is amplified in V301 and then is coupled to the diode detector.

b. Diode Detector. The 455-kc signal is demodulated by crystal diode CR301 which works into a nonlinear load consisting of a resistor and two additional crystal diodes CR302 and CR303. The nonlinear load shapes the detected wave form so that the propeller pattern formed by applying the detected wave form to the 72-kc sweep, has sharp tips for accurate bearing determination.

c. Rf Oscillator. A Colpitts type rf oscillator V309 generates a 72-kc signal. This signal is coupled to the control modulator and is the basic signal source used to produce the sweep on the cathode-ray tube. The rf oscillator output is also coupled to high-voltage power supply V310 which produces 2,000 volts for application to the cathode-ray tube.

d. High-Voltage Power Supply. The output of the high-voltage transformer is rectified by V310 and applied to a filter and bleeder system to form a negative 2,000-volt supply. The function of this supply is to provide the various cathode-ray tube potentials.

e. Control Modulator.

(1) *No signal condition.* The 72-kc signal from the rf oscillator is applied to the signal grid of the control modulator V302 and passes successively through rf amplifier V303, the indicator goniometer, sense switch S301 and the deflection transformers (horizontal and vertical channels) to the deflection plates of the cathode-ray tube. The application of this 72-kc signal to the deflection plates produces a diametral line that pivots at the center of the tube to a position corresponding to the indicator goniometer rotor position. When the indicator goniometer shaft is rotating, a two-phase output is generated across the stator windings. The application of this two-phase voltage to the deflection system of the cathode-ray tube rotates the diametral line. The pattern appears as a filled-in circle because of the persistance of vision and screen persistence.

(2) *Signal Condition.* The modulation voltage derived from the received signal by the detector is applied to the injection grid (pin 1) of control modulator V302 while the steady 72-kc signal is applied to the signal grid (pin 7). The modulating frequency is approximately 54 cps because the signal goniometer is rotating at 27 revolutions per second, and there are two maximum signal positions per revolution. The negative excursion of the modulation voltage varies the output amplitude of the control modulator, thus controlling the amplitude of the rotating diametral line. With the modulation wave shape shown in figure 73, a propeller-shaped pattern is obtained.

f. Rf Amplifier. Rf amplifier V303 increases the power level of the modulated 72-kc signal which is then applied to the rotor of the indicator goniometer.

g. Indicator Goniometer. A rotary transformer couples the output of rf amplifier V303 to the input (rotor) of the indicator goniometer. The indicator goniometer has two stators placed at right angles to each other. One stator is coupled through sense switch S301 and the vertical channel to the vertical deflection plates of the cathode-ray tube. The second stator is coupled through the sense switch and the horizontal channel to the horizontal deflection plates of the cathode-ray tube. The horizontal and vertical channels consist of impedance-matching transformers which match the low goniometer output impedance to the high deflection plate impedance. The 72-kc signal generates the cathode-ray tube sweep and the 54-cycle modulation gives direction to the diametral sweep.

h. Cathode-Ray Tube. Cathode-ray tube V304 presents an accurately positioned propeller pattern in accordance with the phase of the modulation imposed on the signal by the signal goniometer. An alidade assembly is used for ascertaining the exact bearing of the signal.

i. Low-Voltage Power Supply.

(1) *Rectifier.* Rectifier V305 rectifies the 50- to 60-cps ac from the power transformer to supply plate voltage for the various tubes in the azimuth indicator.

(2) *Dc Amplifier.* Dc amplifier V307 amplifies the changes in power supply voltage produced by changing load or changing line voltage and applies a signal to the grid of the regulator tube V306 to maintain a constant dc output voltage.

(3) *Regulator.* Regulator V306 is essentially a variable resistance in series with the plate supply and its load. Changes in output voltage result in a compensating change in plate resistance of the regulator tube which is controlled by the dc amplifier. The output voltage is maintained at 275 volts.

(4) *Voltage Regulator.* Voltage regulator V308 is a cold cathode type gaseous voltage regulator tube. This tube provides an independent reference voltage for the dc amplifier.

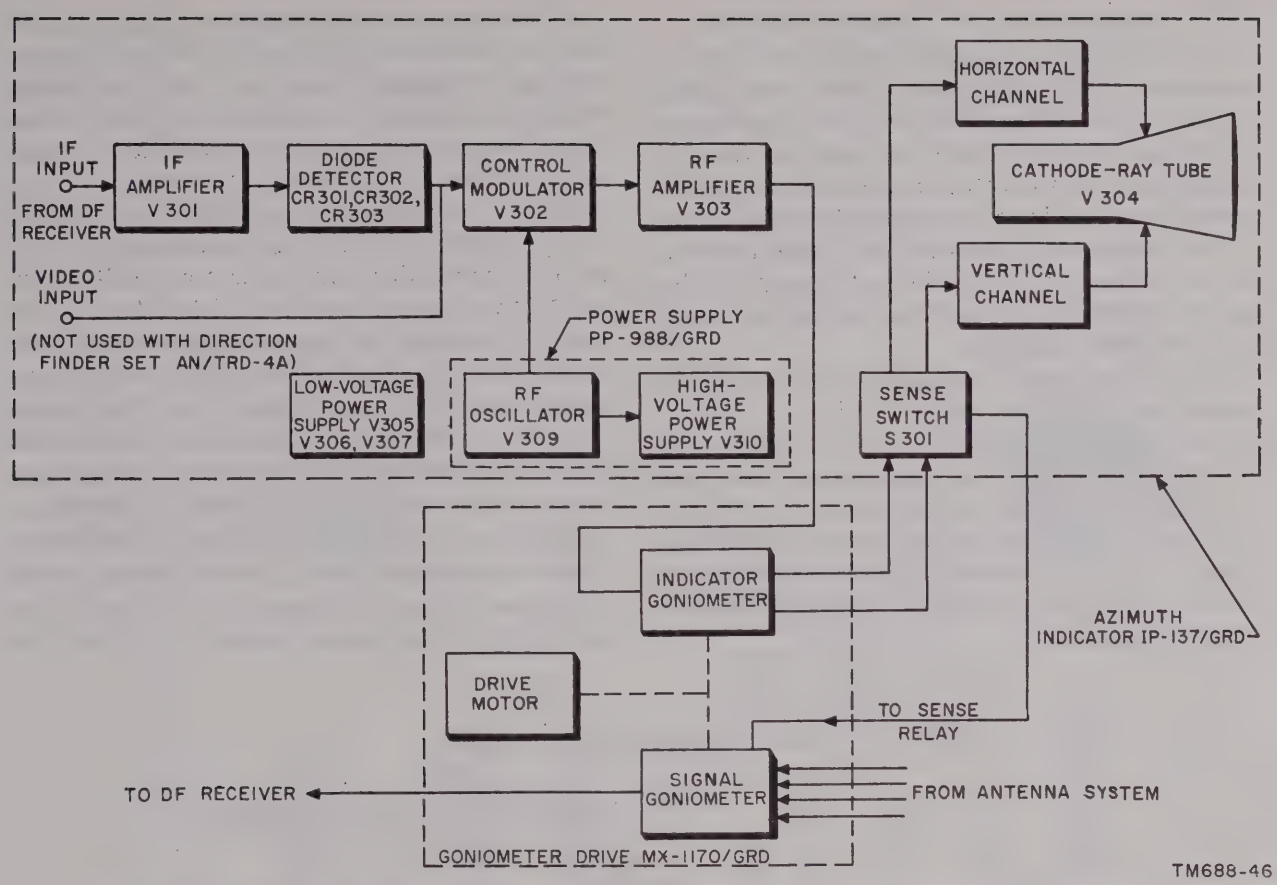

Figure 72. Azimuth Indicator IP–137/GRD and Goniometer Drive MX–1170/GRD, block diagram.

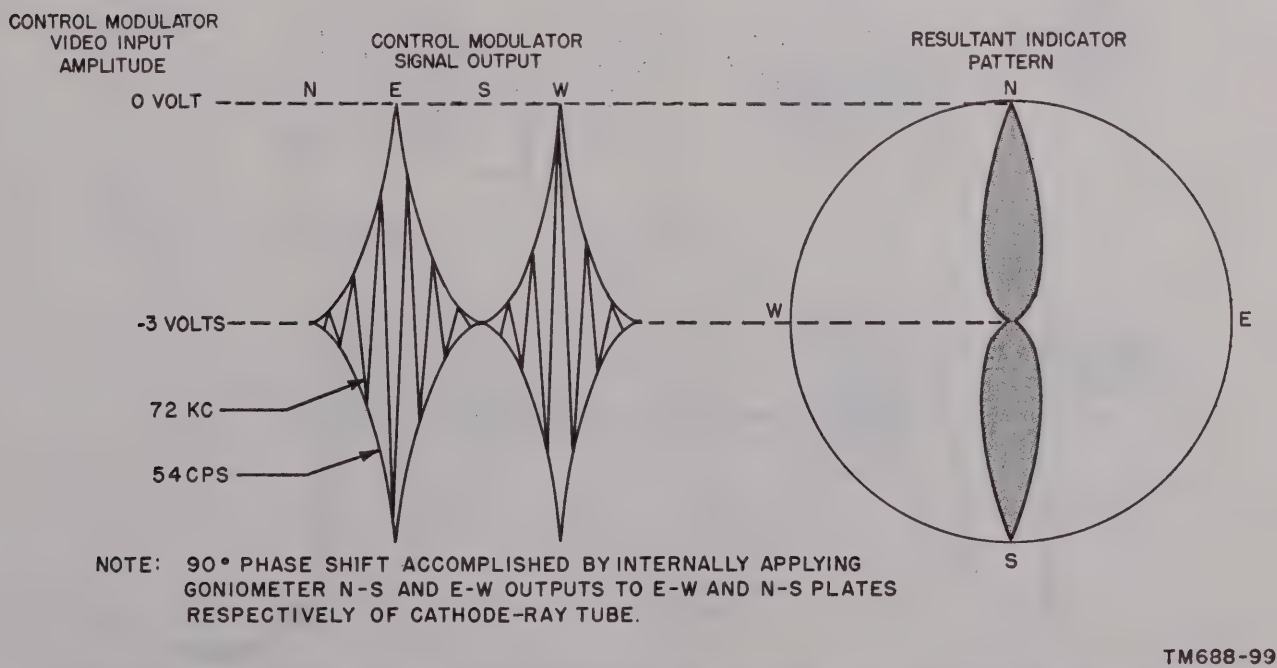

Figure 73. Relationship between control modulator wave form and resultant propeller-shaped pattern.

137. Development of Circular Pattern

a. There are two signal inputs to control modulator V302. One input is the 72-kc signal output of rf oscillator V309 and the other input is the modulating signal imposed on the received signal by the rotation of the *signal* goniometer rotor. A circle is presented on the screen of the cathode-ray tube when no signal is being received; that is, when the only input to the control modulator is the 72-kc output of the rf oscillator (D1, fig. 74).

b. The 72-kc input is amplified by the control modulator and the output (E1, fig. 74) is applied through rf amplifier V303 to the rotor winding of the indicator goniometer. The output of one of the indicator goniometer stator windings is connected to the vertical deflection plates of the cathode-ray tube and the output of the other is connected to the horizontal deflection plates.

c. The stator outputs under no signal condition are illustrated in figure 75. When the rotor winding is perpendicular to a stator winding, minimum voltage is induced in the stator. When the rotor is parallel to the stator, maximum voltage is induced in the stator. When the rotor is rotated through 360°, there are two positions in which the rotor is perpendicular to a particular stator and two positions in which the rotor is parallel to the stator. The speed of rotation of the rotor is 27 revolutions per second. Two maximums and two minimums are produced per revolution. The 72-kc stator outputs, therefore, are amplitude-modulated at 54 cps. The stators are arranged at right angles to each other and when the rotor is parallel to one stator, it is perpendicular to the other. When minimum voltage is induced in one stator, maximum voltage is induced in the other. That is, the 54-cps amplitude modulation of the two

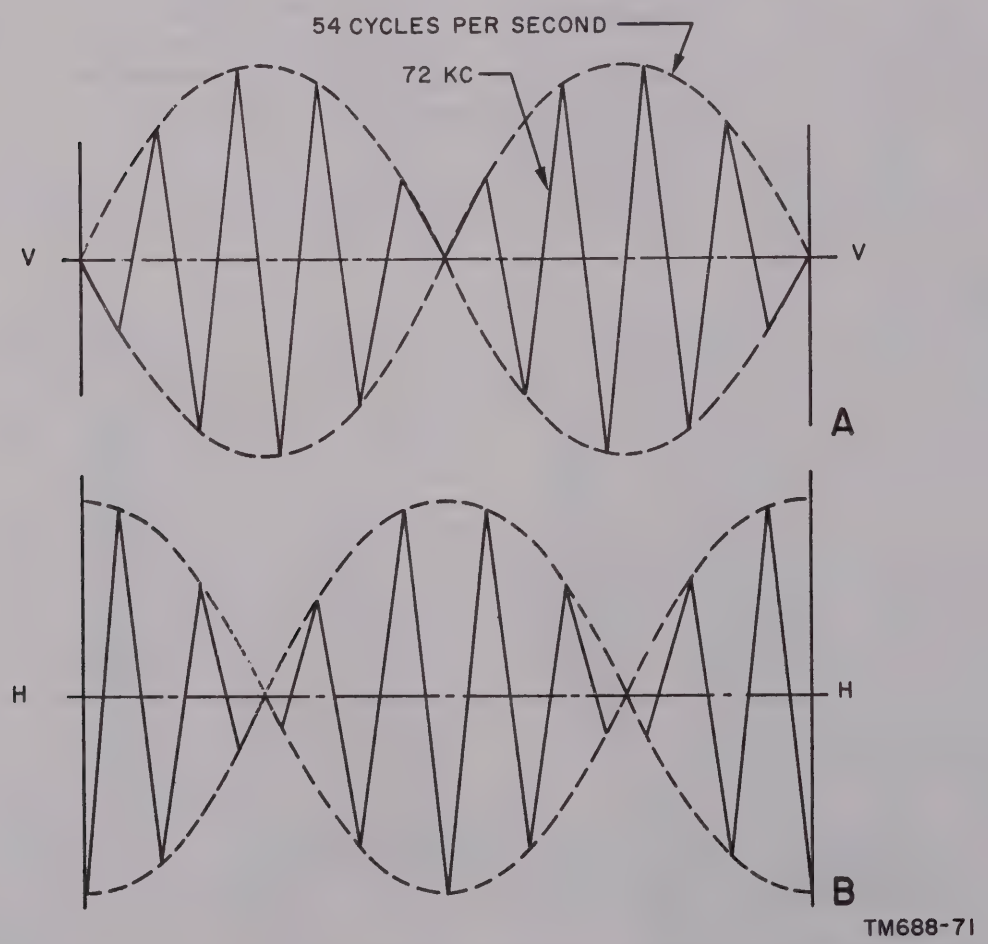

Figure 75. Phase relationship of horizontal and vertical components of the no-signal indicator sweep.

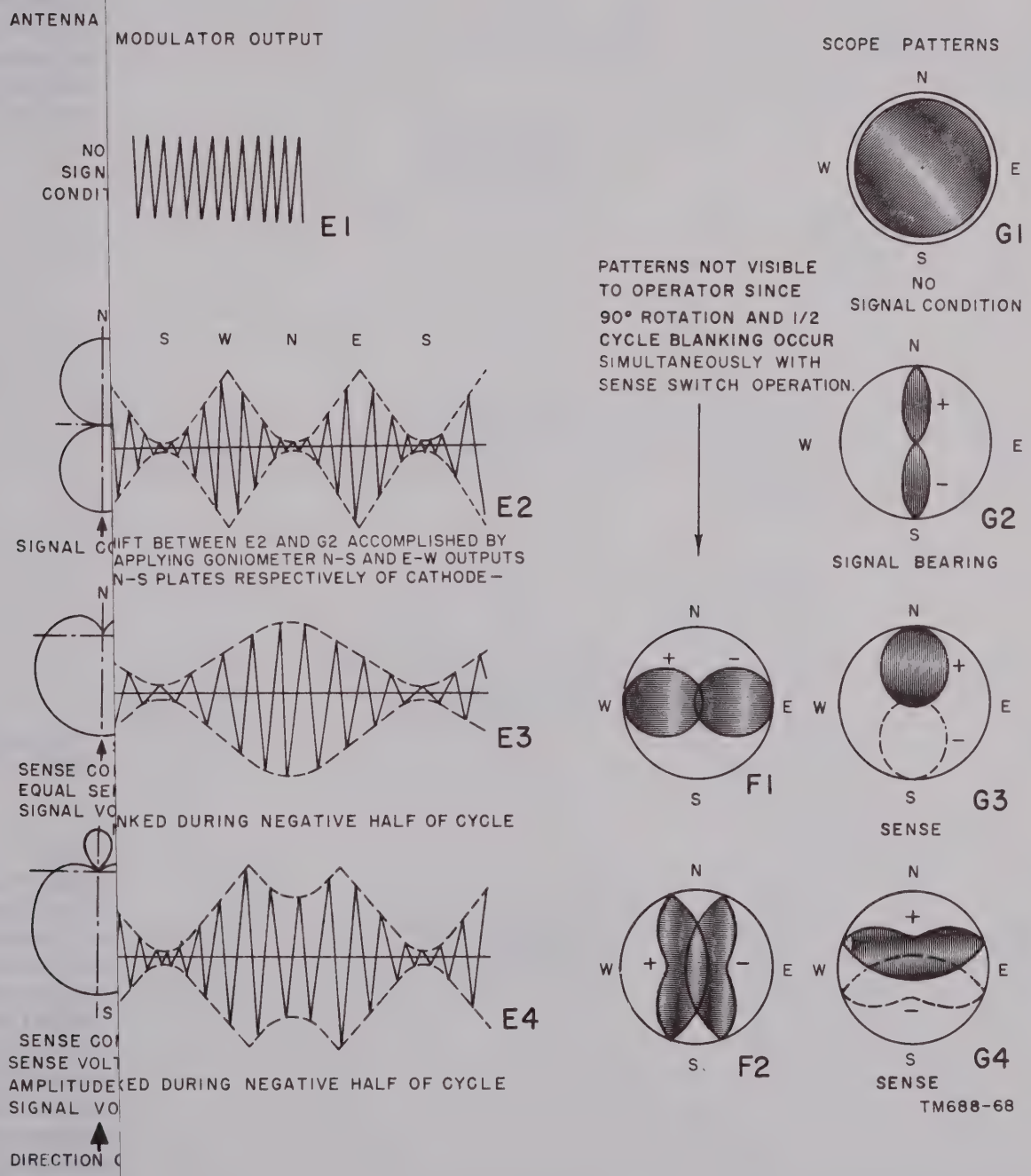

428027 O-57 (Face p. 126)

137. Development of Circular Pattern

a. There are two signal inputs to control modulator V302. One input is the 72-kc signal output of rf oscillator V309 and the other input is the modulating signal imposed on the received signal by the rotation of the *signal* goniometer rotor. A circle is presented on the screen of the cathode-ray tube when no signal is being received; that is, when the only input to the control modulator is the 72-kc output of the rf oscillator (D1, fig. 74).

b. The 72-kc input is amplified by the control modulator and the output (E1, fig. 74) is applied through rf amplifier V303 to the rotor winding of the indicator goniometer. The output of one of the indicator goniometer stator windings is connected to the vertical deflection plates of the cathode-ray tube and the output of the other is connected to the horizontal deflection plates.

c. The stator outputs under no signal condition are illustrated in figure 75. When the rotor winding is perpendicular to a stator winding, minimum voltage is induced in the stator. When the rotor is parallel to the stator, maximum voltage is induced in the stator. When the rotor is rotated through 360°, there are two positions in which the rotor is perpendicular to a particular stator and two positions in which the rotor is parallel to the stator. The speed of rotation of the rotor is 27 revolutions per second. Two maximums and two minimums are produced per revolution. The 72-kc stator outputs, therefore, are amplitude-modulated at 54 cps. The stators are arranged at right angles to each other and when the rotor is parallel to one stator, it is perpendicular to the other. When minimum voltage is induced in one stator, maximum voltage is induced in the other. That is, the 54-cps amplitude modulation of the two

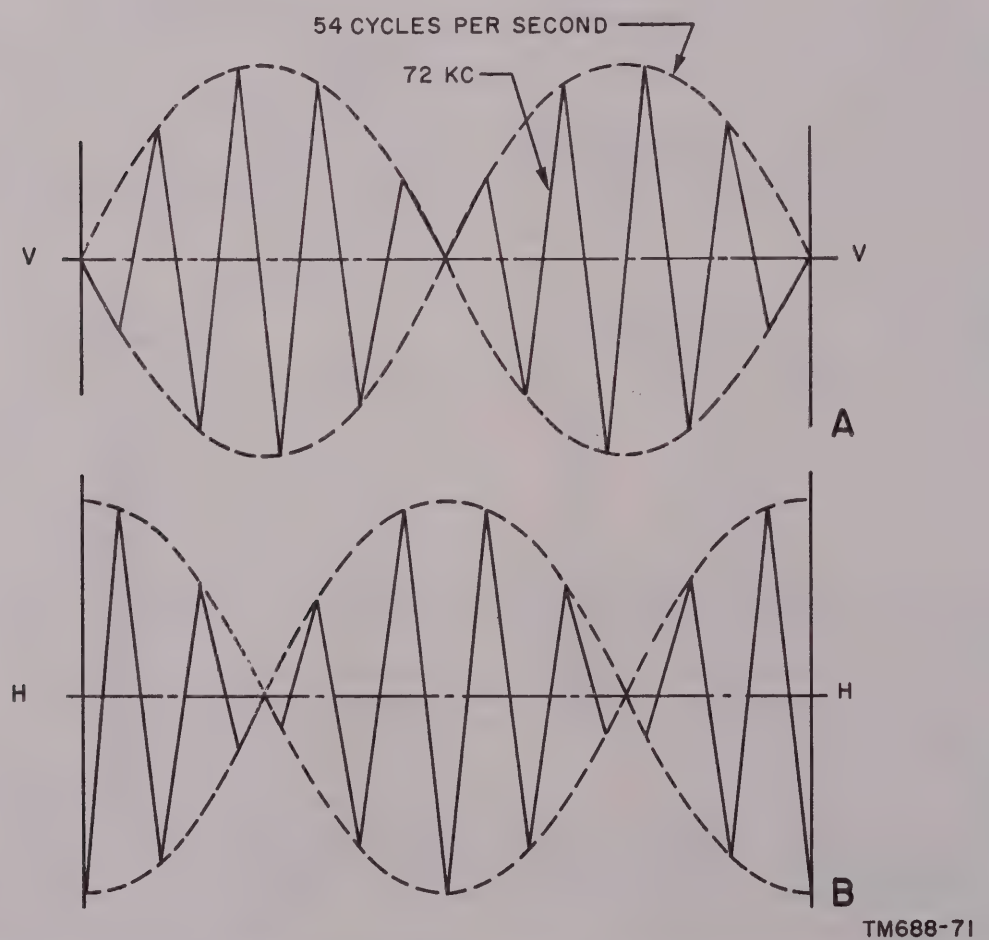

Figure 75. Phase relationship of horizontal and vertical components of the no-signal indicator sweep.

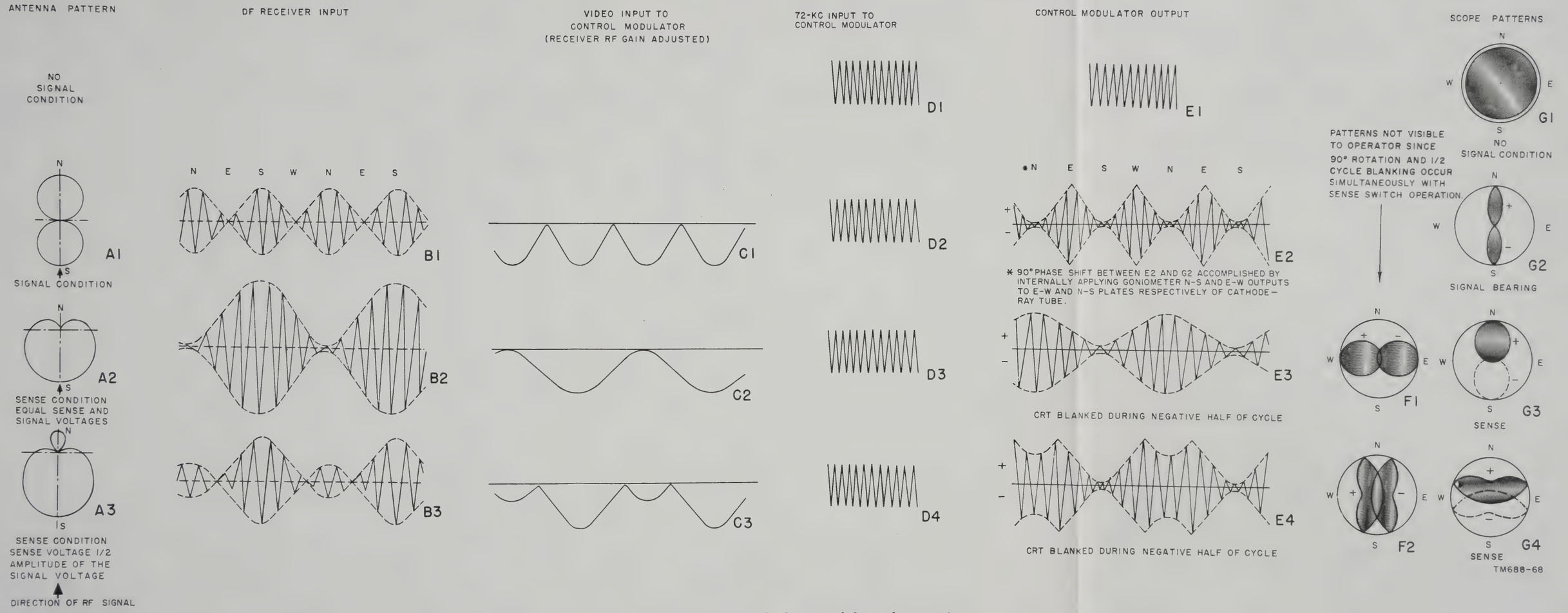

Figure 74. Progression from df receiver inputs to cathode-ray tube presentations.

428027 O-57 (Face p. 126)

stator signals are 90° out of phase as illustrated in figure 75. The signal induced in the stator winding connected to the vertical deflection plates when no signal is being received is shown in A, figure 75. The signal induced in the stator winding connected to the horizontal deflection plates when no signal is being received is shown in B, figure 75.

d. The vertical and horizontal deflection plates of the cathode-ray tube are displaced 90° and therefore exert right angle forces on the cathode-ray tube beam. The relative amplitude of the voltages on the vertical and horizontal deflection plates for any position of the rotor from 0° to 360° is shown in figure 76. The vector resultant of the two right angle forces is constant in amplitude and its angle varies in accordance with the amplitude and polarity of the 72-kc signal applied to the deflection plates. The resulting position of the cathode-ray tube pattern for each 45° point is shown in figure 76.

e. The diametral line is produced by the in-phase 72-kc voltages applied to the deflection plates. Rotation of the diametral line to produce a circle is accomplished by the modulation of the 72 kc by the rotation of the indicator goniometer rotor. It can be seen therefore, that because of the rotation of the goniometer rotor, a rotary force is exerted on the cathode-ray beam and produces a constant length diametral line spinning at 27 revolutions per second (1,620 rpm). Because of the persistence of vision, the pattern appears as a filled-in circle (G1, fig. 74).

138. Development of Bearing Pattern (fig. 77)

a. The bearing pattern is presented on the screen of the cathode-ray tube when a signal is being received; that is, when both the 72-kc signal from the rf oscillator and the 54-cps modulating signal imposed on the received signal are applied to the control modulator. The rotation of the signal goniometer rotor imposes the 54-cps modulation on the received signal as the rotor passes through the points of minimum and maximum induction from the stators. The stators are connected to either the Adcock or the crossed-loop antenna, and the phase of this modulation depends on the direction of arrival of the signal as illustrated in A and B, figure 77.

b. The amplitude-modulated .5- to 30-mc signal from the signal goniometer rotor is fed to the df receiver and converted to a 455-kc signal (C, fig. 77). This amplitude-modulated 455-kc

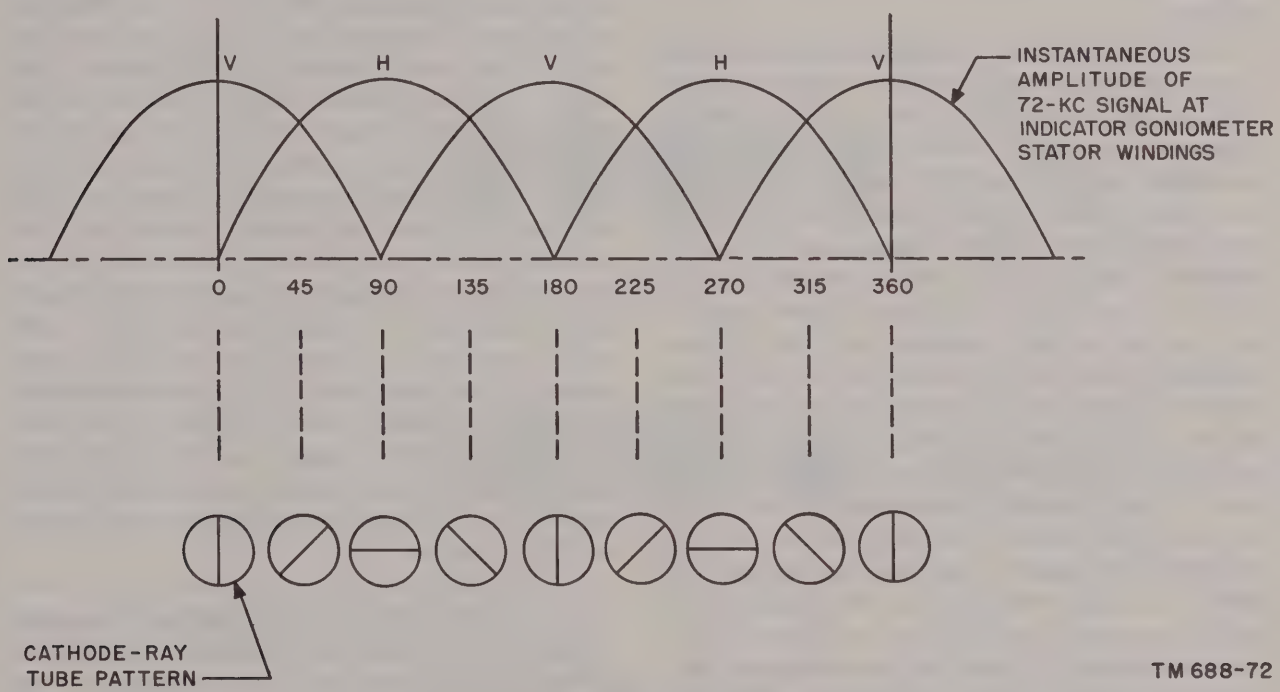

Figure 76. Development of rotating line.

signal is fed to the azimuth indicator where it is amplified and demodulated. The modulation envelope (D, fig. 77) is applied to the control grid of the control modulator to impress the direction-conscious information on the circular cathode-ray tube pattern. The modulation voltage amplitude varies from 0 to approximately —3 volts and is capable of cutting off the control modulator at its negative peak. As the modulation voltage varies from 0 to —3 volts, the 72-kc output from the control modulator varies from maximum to 0 volt (E, fig. 77). Therefore, the rotating line on the cathode-ray tube varies from a 4-inch length down to a dot in accordance with the rate of negative voltage increase.

c. As the rotor of the signal goniometer is rotated through 360°, the rotor *output* varies through two maximums and two minimums displaced by 180°. The rotor of the signal goniometer and the rotor of the indicator goniometer are synchronized by being driven by the same drive motor at the same speed. For one complete rotation of the indicator goniometer, the rotor *input* varies through two maximums and two minimums displaced by 180°. Each maximum produces a line on the screen of the cathode-ray tube. The maximums are displaced by 180°; therefore, the lines will be superimposed and will appear as one line. The positions of the indicator goniometer rotor when the maximum 72-kc signal is applied and the positions when there is no 72-kc signal are the same for each revolution of the rotor. The pattern presented on the screen of the cathode-ray tube screen is therefore a stationary propeller (F, fig. 77); the propeller portion of the presentation is due to the maximum 72-kc signal applied to the rotor, and the blank portions of the presentation are due to the absence of an applied signal.

d. A comparison of the wave forms in columns D and E of figure 77, shows that the maximums of the two wave forms are displaced by 90°. When the envelope of the modulating signal (D, fig. 77) is maximum, the control modulator is cut off and the control modulator output (E, fig. 77) is minimum. When the envelope of the modulating signal is minimum, the output of the control modulator is maximum. The 90° phase shift introduced between these two wave forms would result in a 90° error in the bearing pattern. The 90° error is eliminated by applying the indicator goniometer north-south and east-west outputs to the east-west (horizontal) and north-south (vertical) deflection plates respectively of the cathode-ray tube.

139. Development of Sense Pattern

a. The propeller-shaped pattern displayed on the screen of the cathode-ray tube indicates a direct and a reciprocal bearing which can be accurately marked by bisecting the propeller-shaped pattern with the alidade cross hairs. The indication of the hairline is bidirectional; that is, the hairline passing through the tips of the propeller points to a direct bearing and a reciprocal bearing which are read on the azimuth scale surrounding the cathode-ray tube screen. One additional step is necessary to obtain a unidirectional bearing pattern which will indicate which of the two readings obtained on the azimuth scale is the direct bearing. This unidirectional bearing pattern which is called the sense pattern will show up in various shapes not suitable for obtaining a setting of the alidade, but always positioned in the half of the circle opposite the direct bearing. The sense pattern is accomplished by two separate simultaneous operations; one is a signal goniometer output wave form change, and the other is a shift of 90° in the cathode-ray tube presentation in conjunction with half-cycle blanking of the 72-kc sweep.

b. The change in the signal goniometer output wave form is obtained by adding the sense voltage to the directional voltage. During visual operation, the sense voltage is obtained from a phantom sense antenna (par. 123). The sampling of voltages from each antenna obtained by operation of the sense relay located in the signal goniometer creates a response pattern that would be produced by a vertical antenna positioned at the center of the spaced antenna systems. Figure 78 shows the directional antenna response pattern, the phantom sense antenna response pattern, and the resultant pattern created by combining the two. Assuming a signal arriving from directly south, a directional antenna response pattern as shown in A1, figure 78 is obtained. Under sense conditions the voltage appearing at the phantom sense antenna is 90° removed from each lobe as shown by the vectors in A2, figure 78.

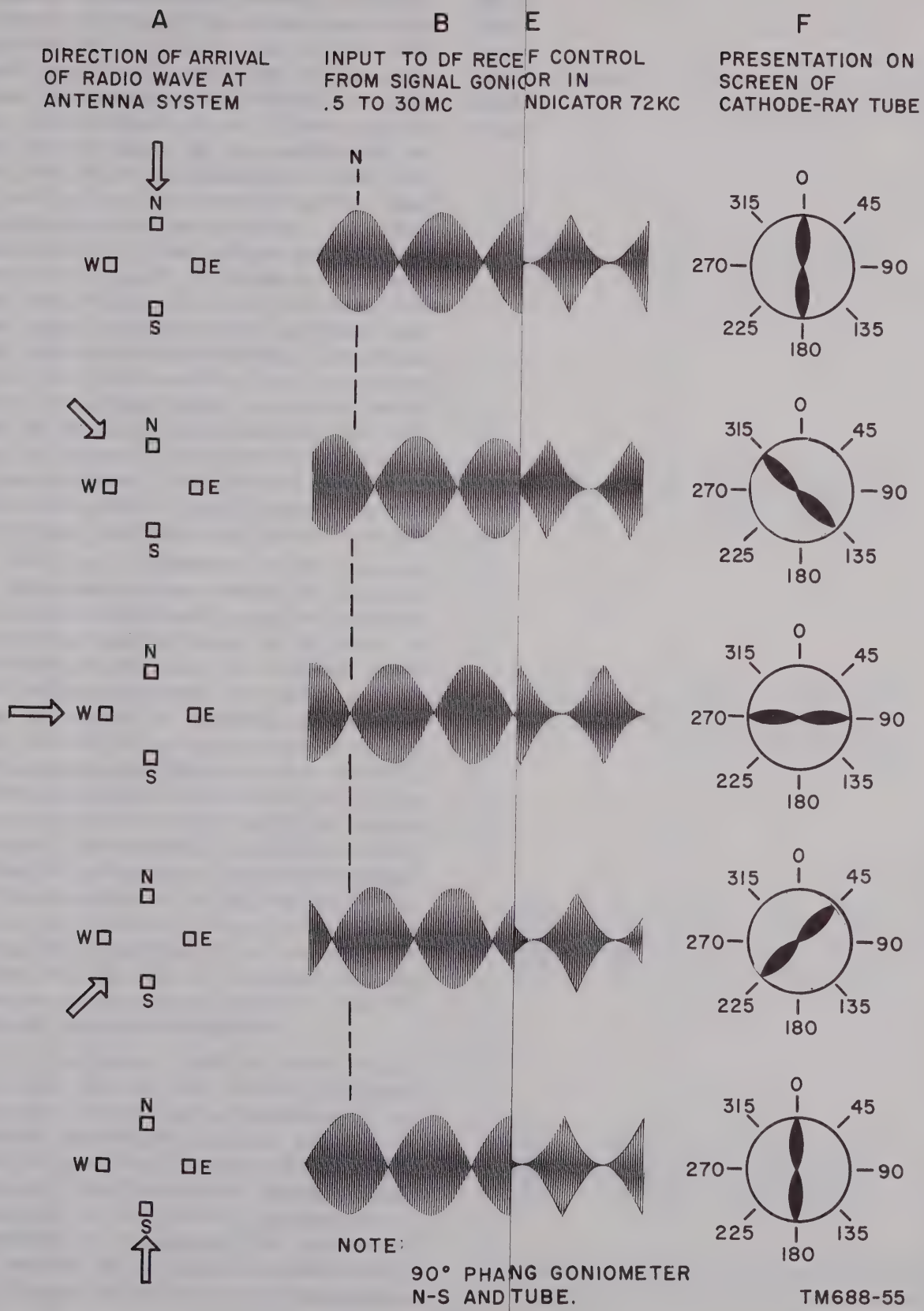

Figure 77. Relationship between dirns on cathode-ray tube.

428027 O-57 (Face p. 128)

signal is fed to the azimuth indicator where it is amplified and demodulated. The modulation envelope (D, fig. 77) is applied to the control grid of the control modulator to impress the direction-conscious information on the circular cathode-ray tube pattern. The modulation voltage amplitude varies from 0 to approximately —3 volts and is capable of cutting off the control modulator at its negative peak. As the modulation voltage varies from 0 to —3 volts, the 72-kc output from the control modulator varies from maximum to 0 volt (E, fig. 77). Therefore, the rotating line on the cathode-ray tube varies from a 4-inch length down to a dot in accordance with the rate of negative voltage increase.

c. As the rotor of the signal goniometer is rotated through 360°, the rotor *output* varies through two maximums and two minimums displaced by 180°. The rotor of the signal goniometer and the rotor of the indicator goniometer are synchronized by being driven by the same drive motor at the same speed. For one complete rotation of the indicator goniometer, the rotor *input* varies through two maximums and two minimums displaced by 180°. Each maximum produces a line on the screen of the cathode-ray tube. The maximums are displaced by 180°; therefore, the lines will be superimposed and will appear as one line. The positions of the indicator goniometer rotor when the maximum 72-kc signal is applied and the positions when there is no 72-kc signal are the same for each revolution of the rotor. The pattern presented on the screen of the cathode-ray tube screen is therefore a stationary propeller (F, fig. 77); the propeller portion of the presentation is due to the maximum 72-kc signal applied to the rotor, and the blank portions of the presentation are due to the absence of an applied signal.

d. A comparison of the wave forms in columns D and E of figure 77, shows that the maximums of the two wave forms are displaced by 90°. When the envelope of the modulating signal (D, fig. 77) is maximum, the control modulator is cut off and the control modulator output (E, fig. 77) is minimum. When the envelope of the modulating signal is minimum, the output of the control modulator is maximum. The 90° phase shift introduced between these two wave forms would result in a 90° error in the bearing pattern. The 90° error is eliminated by applying the indicator goniometer north-south and east-west outputs to the east-west (horizontal) and north-south (vertical) deflection plates respectively of the cathode-ray tube.

139. Development of Sense Pattern

a. The propeller-shaped pattern displayed on the screen of the cathode-ray tube indicates a direct and a reciprocal bearing which can be accurately marked by bisecting the propeller-shaped pattern with the alidade cross hairs. The indication of the hairline is bidirectional; that is, the hairline passing through the tips of the propeller points to a direct bearing and a reciprocal bearing which are read on the azimuth scale surrounding the cathode-ray tube screen. One additional step is necessary to obtain a unidirectional bearing pattern which will indicate which of the two readings obtained on the azimuth scale is the direct bearing. This unidirectional bearing pattern which is called the sense pattern will show up in various shapes not suitable for obtaining a setting of the alidade, but always positioned in the half of the circle opposite the direct bearing. The sense pattern is accomplished by two separate simultaneous operations; one is a signal goniometer output wave form change, and the other is a shift of 90° in the cathode-ray tube presentation in conjunction with half-cycle blanking of the 72-kc sweep.

b. The change in the signal goniometer output wave form is obtained by adding the sense voltage to the directional voltage. During visual operation, the sense voltage is obtained from a phantom sense antenna (par. 123). The sampling of voltages from each antenna obtained by operation of the sense relay located in the signal goniometer creates a response pattern that would be produced by a vertical antenna positioned at the center of the spaced antenna systems. Figure 78 shows the directional antenna response pattern, the phantom sense antenna response pattern, and the resultant pattern created by combining the two. Assuming a signal arriving from directly south, a directional antenna response pattern as shown in A1, figure 78 is obtained. Under sense conditions the voltage appearing at the phantom sense antenna is 90° removed from each lobe as shown by the vectors in A2, figure 78.

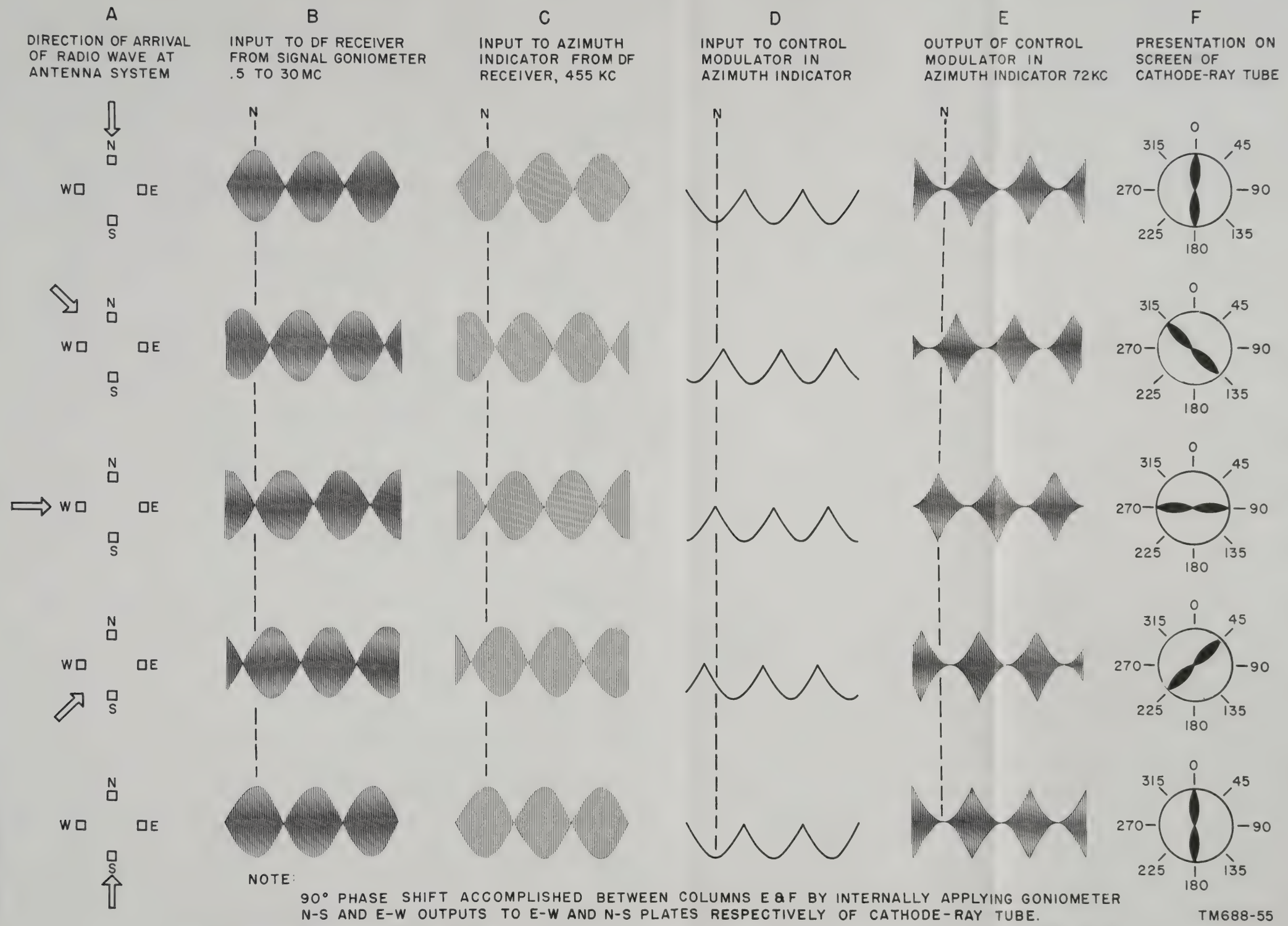

Figure 77. Relationship between direction of arrival of an rf signal at the antenna, bearing wave forms in direction finder set, and bearing indications on cathode-ray tube.

428027 O-57 (Face p. 128)

The phantom sense antenna output is shifted in phase by a sense phasing network located in the signal goniometer. The sense phasing network consists of resistive and reactive components which shift the phase of the sense voltage 90°, bringing it in phase with one lobe of the signal voltage and out of phase with the other. In A2, figure 78, it is arbitrarily assumed that the sense voltage is in phase with the positive lobe. Algebraically adding equal amplitude phantom sense voltage and signal voltage, results in the cardioid pattern illustrated in A3, figure 78. Reducing the amplitude of the sense voltage to one-half the amplitude of the signal voltage raises a secondary lobe on the resultant pattern as shown in A4, figure 78. The wave form resulting from this antenna pattern is the ideal signal goniometer output which is applied to the df receiver and ultimately to the azimuth indicator to produce the ideal sense pattern. The B column in figure 78 shows the df receiver input for corresponding antenna conditions illustrated in the A column.

c. The signal goniometer output resulting from the antenna pattern shown in A3, figure 74 for a signal from directly south, will produce the ideal sense pattern shown in B3, figure 74. This amplitude-modulated .5- to 30-mc signal is fed to the df receiver. The signal selected by the df receiver is amplified, converted to 455-kc, and fed to the azimuth indicator. The amplitude-modulated 455-kc signal is amplified, detected, and the modulation envelope (C3, fig. 74) is applied to the control grid of the control modulator. The modulation envelope changes the bias, hence the gain of the control modulator. The amplification of the constant-amplitude 72-kc signal input to the control modulator (D4, fig. 74) is maximum when the modulation envelope (C3, fig. 74) is minimum, and the control modulator output is minimum when the modulation envelope is maximum.

d. The progression from the control modulator output (E4, fig. 74), which is the input to the rotor of the indicator goniometer to the ideal sense presentation (G4, fig. 74) is illustrated in figure 79. The shift of 90° in the cathode-ray tube presentation during sensing as compared to the bearing presentation is accomplished by connecting the north-south stator winding of the indicator goniometer to the north-south deflection plates of the cathode-ray tube and the east-west stator winding to the east-west deflection plates as shown in B, figure 79. (When the bearing pattern was obtained (par. 138*d*), the connections were displaced 90°.) The indicator goniometer rotor input wave form which will produce the ideal sense pattern is shown in A figure 79.

(1) The indicator goniometer rotor, which is synchronized with the signal goniometer rotor, will be in the position shown in B, figure 79 when the first maximum is applied to the rotor. One complete cycle of the 72-kc input signal to the rotor is shown. In this position of the rotor, the amplitude of the 72-kc signal induced in the east-west winding will be greater than the amplitude of the 72-kc signal induced in the north-south winding because the rotor is closer to being parallel to the east-west winding than to the north-south winding. Because of slow speed of rotation (27 revolutions per second) compared to the frequency of the sweep signal (72,000 cps), it can be assumed that the rotor does not change position during 1 cycle.

(*a*) During the positive alternation of the 72-kc input signal, the voltages induced in the stator windings will be of the polarities shown without the parentheses. Voltages of this polarity applied to the deflection plates will deflect the beam from the center of the screen up and to the left. If the two voltages were equal, the beam would move from the center toward the 345° marking on the scale surrounding the screen of the cathode-ray tube. Because the voltage induced in the east-west winding is greater than the voltage induced in the north-south winding, the beam will be deflected more in the east-west plane than in the north-south plane. In this illustration, the beam will be deflected toward the 300° marking on the azimuth scale surrounding the cathode-ray tube screen. During an alternation, the voltage varies from zero to maximum and back to zero

again; therefore the beam moves from the center to the edge and back to the center of the screen again. Because of the persistence of the material coating on the inside of the screen, the beam appears as a line extending from the center of screen to the 300° marking.

(*b*) During the negative alternation of the 72-kc input signal, the voltages induced in the stators will be reversed as indicated by the signs inclosed in parentheses (B, fig. 79). Voltages of this polarity applied to the deflection plates will cause the beam to be deflected from the center of the screen to the right and down. In this illustration, the beam would be deflected toward the 120° marking on the azimuth scale surrounding the screen of the cathode-ray tube.

(*c*) With the rotor in the position shown in B, figure 79, for a complete cycle of 72-kc input signal, a line would be produced on the face of the cathode-ray tube extending from the 120° marking on the azimuth scale to the 300° marking on the azimuth scale. The portion of the line marked positive would have been produced by the positive alternation of the 72-kc input and the portion of the line marked negative would have been produced by the negative alternation of the 72-kc input.

(2) The indicator goniometer rotor will be in the position shown in C, figure 79 when the second maximum is applied to the rotor. The amplitude of the 72-kc signal induced in the east-west stator winding will still be greater than the amplitude of the 72-kc signal induced in the north-south stator winding.

(*a*) The phase of the voltage induced in the east-west winding for each alternation of the input will be reversed from what it was in B, figure 79. This phase reversal occurs because in moving from the position established in B to the position in C, the rotor would have passed through a position perpendicular to the east-west winding and produced a phase reversal in the east-west output. There is no phase reversal in the north-south output because the rotor does not pass through a position perpendicular to the north-south winding.

(*b*) With the rotor in the position shown in C, figure 79, for a complete cycle of the 72-kc input signal, a line would be produced on the screen of the cathode-ray tube extending from the 60° marking on the azimuth scale to the 240° marking on the azimuth scale. The portion of the line marked positive would have been produced by the positive alternation of the 72-kc input signal and the portion of the line marked negative would have been produced by the negative alternation of the 72-kc input signal.

(3) The cathode-ray tube presentation obtained when the rotor is rotated through 360° is shown in D, figure 79.

(*a*) In passing through the first maximum, a propeller pattern would be produced with the tips pointing to the 120° and 300° markings. The portion of this propeller pattern produced by the positive alternation of the input is marked positive and the portion produced by the negative alternation is marked negative.

(*b*) In passing through the second maximum, a propeller pattern would be produced with the tips of the propeller pointing to the 60° and 240° markings. The signs designate which alternation of the input produced each propeller tip.

(4) The ideal sense pattern which is presented on the screen of the cathode-ray tube is shown in E, figure 79. This pattern is obtained by blanking the portions of the pattern (D, fig. 71), that were produced by the negative alternation of the 72-kc input. The blanking is produced by applying a constant-amplitude 72-kc signal to the

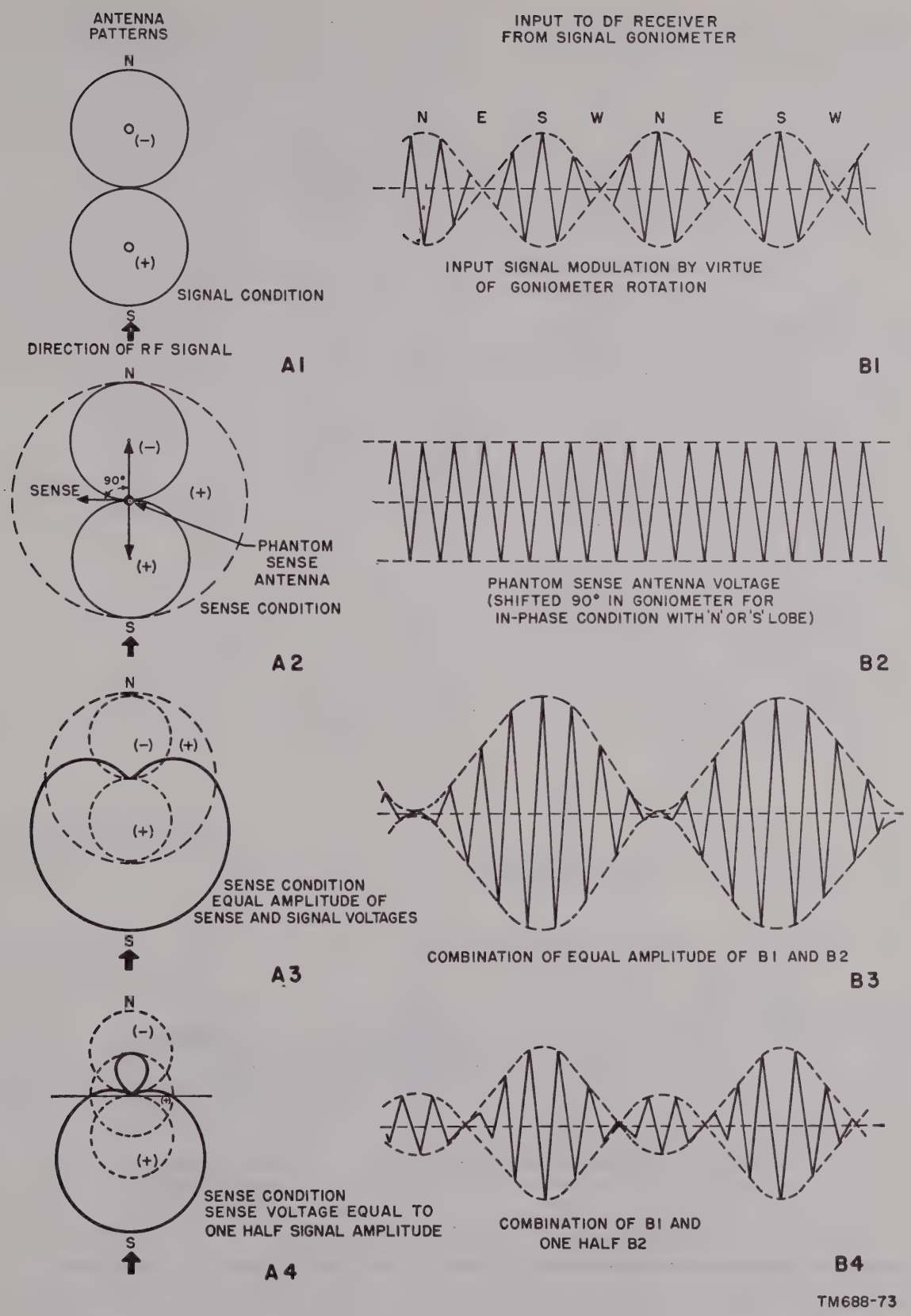

Figure 78. Relation of antenna response pattern to df receiver input wave forms.

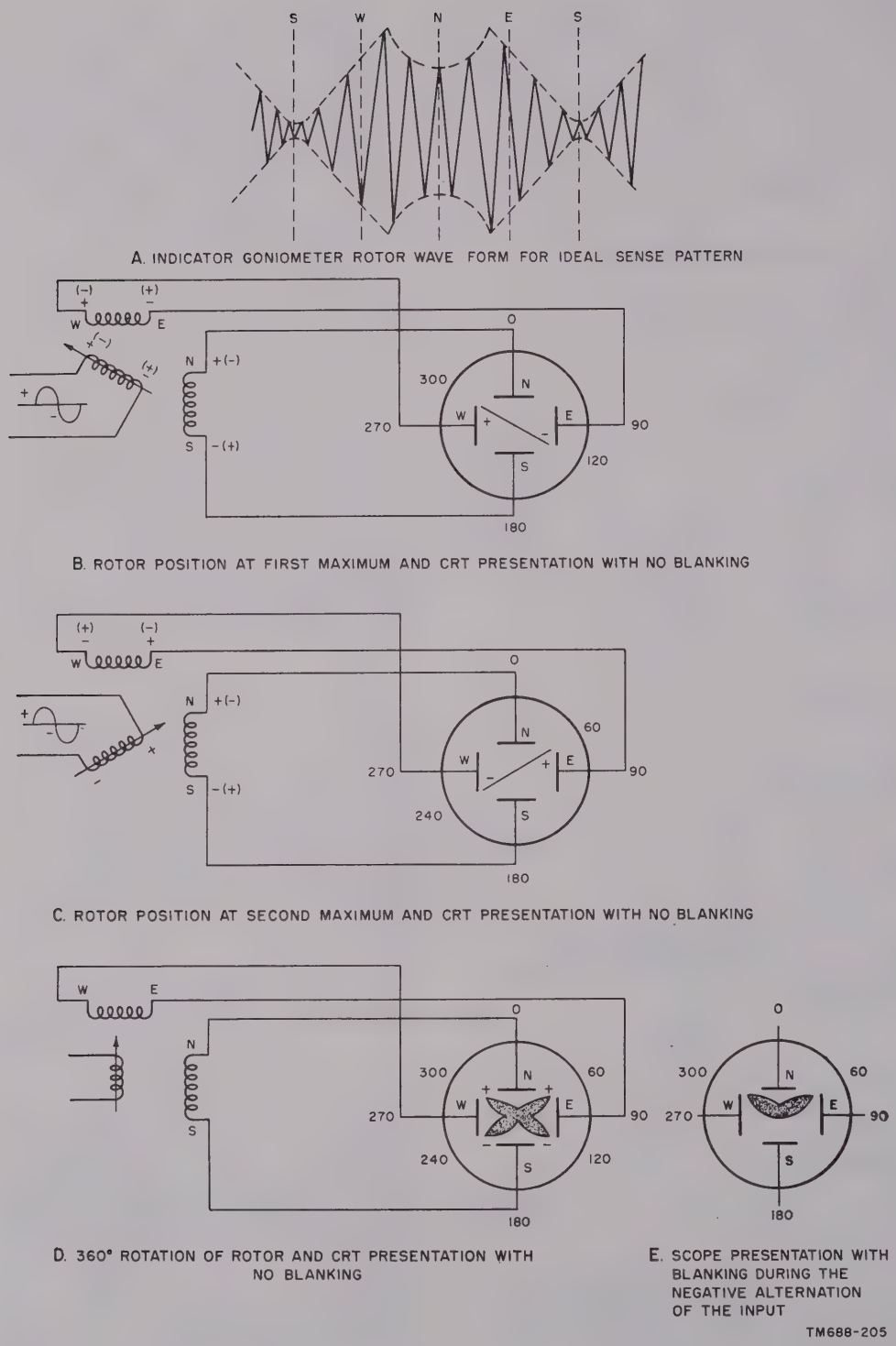

Figure 79. Development of the sense pattern from the ideal signal goniometer rotor wave form.

grid of the cathode-ray tube. The grid of the cathode-ray tube is sufficiently negative during the negative alternation of the 72-kc input to cut off the cathode-ray tube. The arrowhead pattern produced by the positive alternations of the 72-kc input points in the direction of the direct bearing.

Note. A reading is not taken from this pattern. This pattern only indicates which of the two bearings obtained by setting the cross hairs on the bearing pattern is the direct bearing.

(5) As was previously mentioned, the sense pattern may show up in various shapes, but will always be positioned in the half of the screen opposite the direct bearing. The ideal sense pattern produced when the amplitude of the sense voltage is half the amplitude of the signal voltage is shown in G4, figure 74. The pattern shown in F2 would have been presented on the screen if the presentation were not shifted 90° (*d* above) and no blanking signal were applied to the grid of the cathode-ray tube. The sense pattern shown in G3 is produced when the amplitude of the sense voltage is equal to the amplitude of the signal voltage. Although the pattern is not the ideal arrowhead, it is positioned in the half of the screen opposite the direct bearing. The pattern shown in F1 would have been produced if the presentation were not shifted 90° from the bearing presentation and no blanking signal were applied to the grid of the cathode-ray tube.

140. If Amplifier V301
(fig. 80)

The amplitude-modulated 455-kc signal from the df receiver is raised to the required level in the azimuth indicator by if. amplifier V301. The 455-kc signal is coupled from the df receiver to jack J302 on the azimuth indicator. The 455-kc signal is developed across the primary of T301. The secondary of T301 in parallel with capacitor C301 is tuned to resonate at 455-kc, and the 455-kc signal developed across the secondary is coupled to the control grid (pin 1) of V301. The plate load of V301 is a tuned circuit which consists of variable inductor L301 connected in parallel with capacitors C303 and C304 connected in series. The stage output is taken at the junction of capacitors C303 and C304 which form a voltage divider. This voltage divider helps maintain

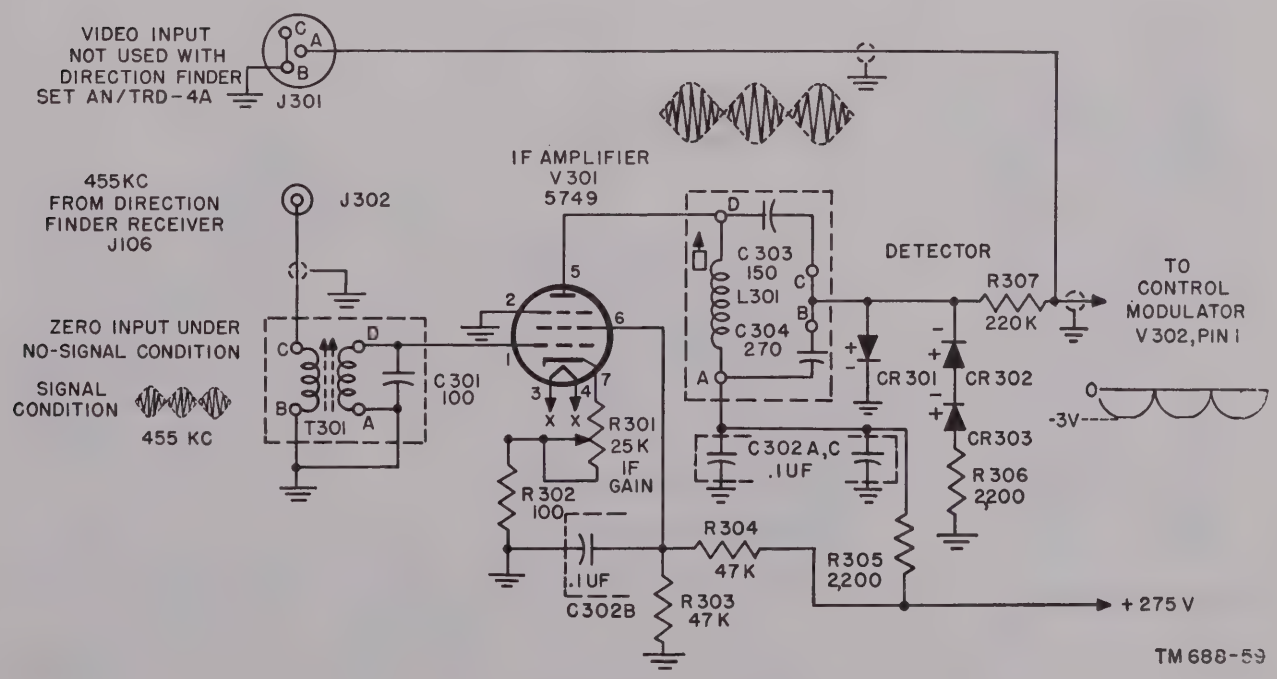

Figure 80. If. amplifier and detector schematic diagram.

the Q of the circuit by decoupling the detector from the tuned plate load. Resistor R305 and capacitors C302A and C302C form a plate decoupling network. Fixed resistor R302 fixes the minimum bias on the stage and if. gain control; R301 varies the gain of the stage by varying the bias on V301. Resistors R303 and R304 form a voltage divider to obtain screen grid voltage. Capacitor C302B is the screen grid bypass capacitor.

141. Detector Circuit CR301, CR302, and CR303

(fig. 80)

a. The detector circuit consists of crystals CR301, CR302, and CR303, and resistors R306 and R307. The detector circuit demodulates the amplitude-modulated 455-kc output from the if. amplifier and shapes the modulation envelope for application to the control grid of the control modulator. The straight line portion of the crystal symbols represents the cathodes, and the arrowhead portion represents the plates. Electron current flow through the crystals is opposite to the direction of the arrowhead.

b. The amplitude-modulated 455-kc input to the detector circuit is shown in A, figure 81. The positive alternations of the 455-kc input are limited by crystal CR301 which conducts during the positive alternation. With only CR301 in the circuit, the detector output would be the amplitude-modulated negative alternations of the 455-kc signal. Crystals CR302 and CR303 and resistor R306 are added to the circuit to distort the modulation envelope to produce sharper propeller tips.

c. The voltage-resistance curve of the crystal diodes is shown in B, figure 81. The forward resistance (resistance to current flow from cathode to plate) is presented on the horizontal axis and the forward voltage (plate positive with respect to the cathode) is presented on the vertical axis. The forward resistance of the crystal is high for low forward voltages and low for high forward voltages. The resistance of the series circuit, consisting of crystals CR302 and CR303 and resistor R306, varies as the amplitude of the input voltage varies. When the modulation envelope is minimum, minimum forward voltage is applied to the crystals, and the forward resistance of the series circuit is maximum. When the modulation envelope is maximum, maximum forward voltage is applied to the crystals, and the forward resistance of the series circuit is minimum. During the minimums in the modulation envelope, the load on the signal source is minimum and the signal

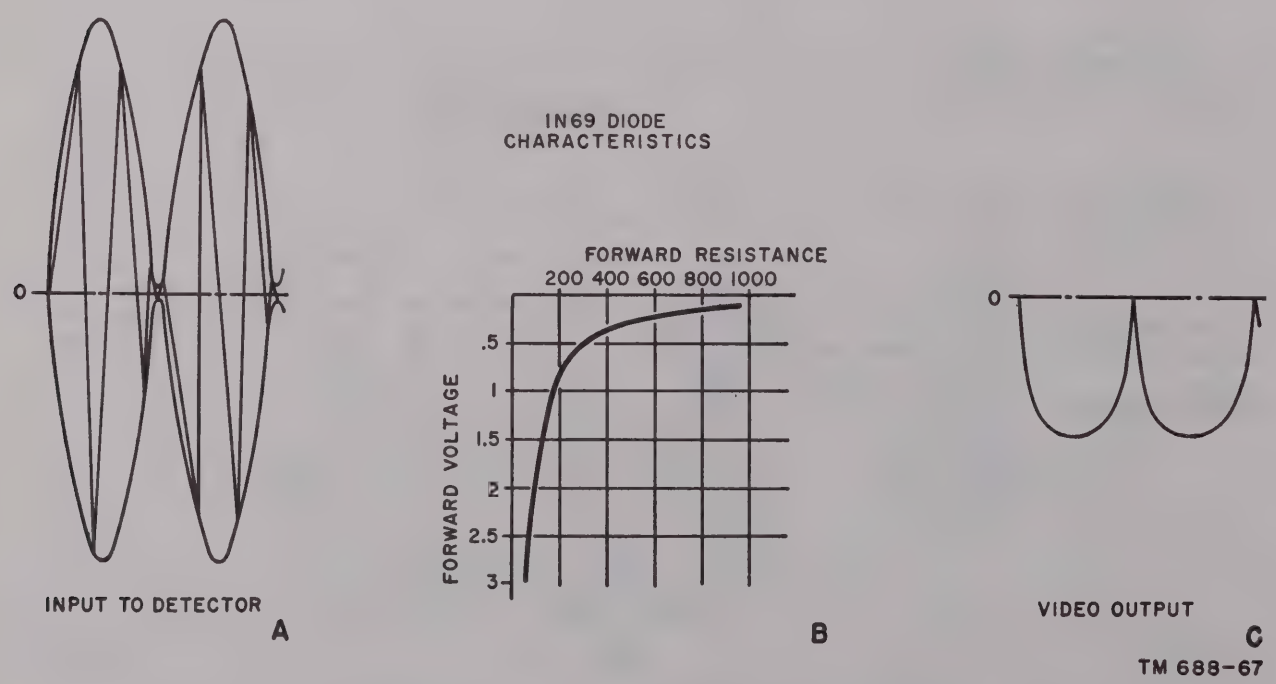

Figure 81. Detector analysis.

is not distorted. During the maximums in the modulation envelope, the load on the signal source is maximum and the signal is limited. Resistor R306 limits the value of the lowest resistance of the series circuit. Resistor R307 and the capacitance of the cable that connects the detector output to the control modulator filter the 455 kc. The filtered output from the detector is shown in C, figure 81. The steep sides of the detector output which are the result of the distortion introduced by CR302 and CR303 result in sharp propeller tips on the bearing presentation. The detector output is connected by coaxial cable to the grid (pin 1) of control modulator V302.

142. Control Modulator V302 (fig. 82)

The function of control modulator V302 is to combine the direction-conscious information from the detector with a 72-kc signal from rf oscillator V309 to produce a modulated pattern on the cathode-ray tube. The combination of the two signals takes place in V302 which is a pentagrid converter. The 72-kc signal from the rf oscillator is applied to the injector grid (pin 7). The signal modulation envelope from the detector is applied to the control grid (pin 1).

a. When a signal is received, the signal modulation envelope out of the detector varies the bias on the control grid of V302 from 0 to approximately —3 volts. With zero bias, full amplification of the 72-kc signal which is applied to the injector grid is obtained. As the bias increases, the amplification of V302 decreases until at —3 volts bias, V302 is cut off and zero output results. The maximum amplitude of the 72-kc signal output at the plate of V302 is varied by SIZE control R313 which adjusts the 72-kc input level.

b. The primary of T302 is the plate load impedance of V302 and is tuned to resonance by capacitors C307, C308, and C336. Resistor R362 broadens the tuning response. Capacitor C309 is the plate supply bypass capacitor. Capacitor C306 in parallel with C305 are the screen grid bypass capacitors. Resistors R310, R311, R312, R309, and R308 comprise a voltage divider from the 275-volt supply. The screen grid voltage is taken from the arm of modulator gain potentiometer R309. The fixed positive voltage for the cathode is obtained from the junction of R308 and R309. Resistor R314 reduces the amplitude of the 72-kc signal applied to SIZE control R313 to a usable level. Capacitor C335 delays the phase of the 72-kc signal

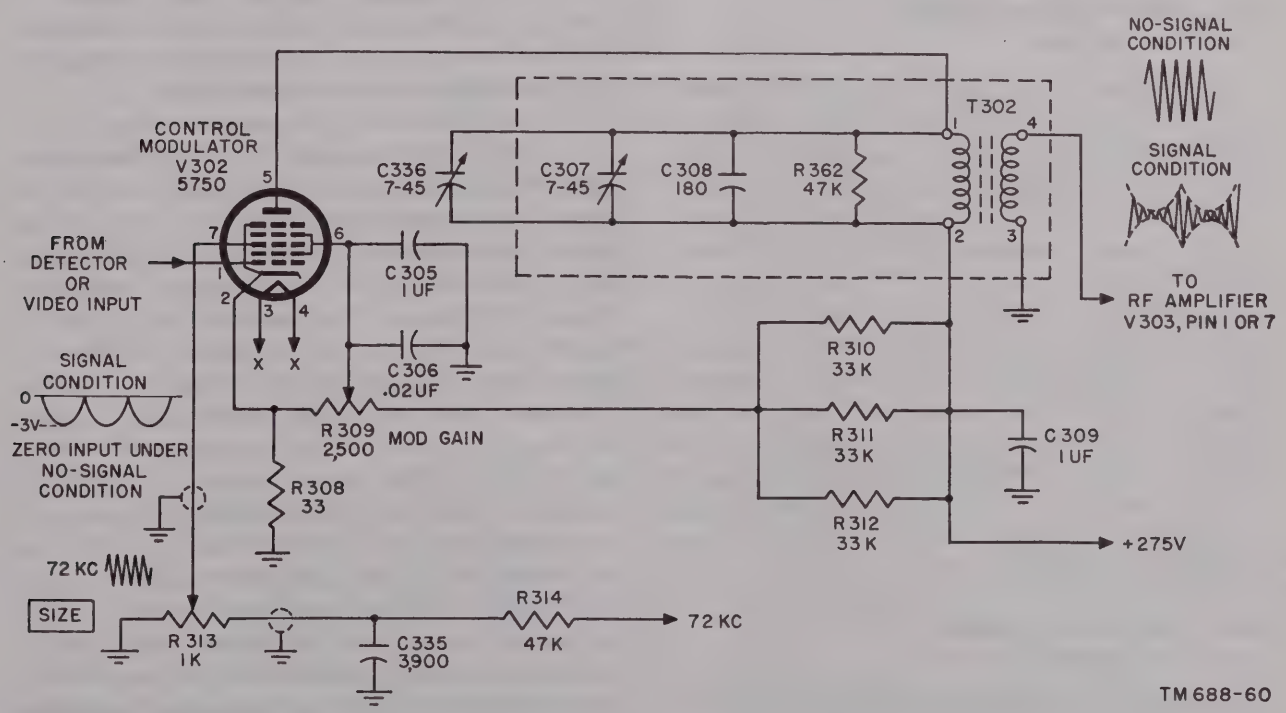

Figure 82. Control modulator, schematic diagram.

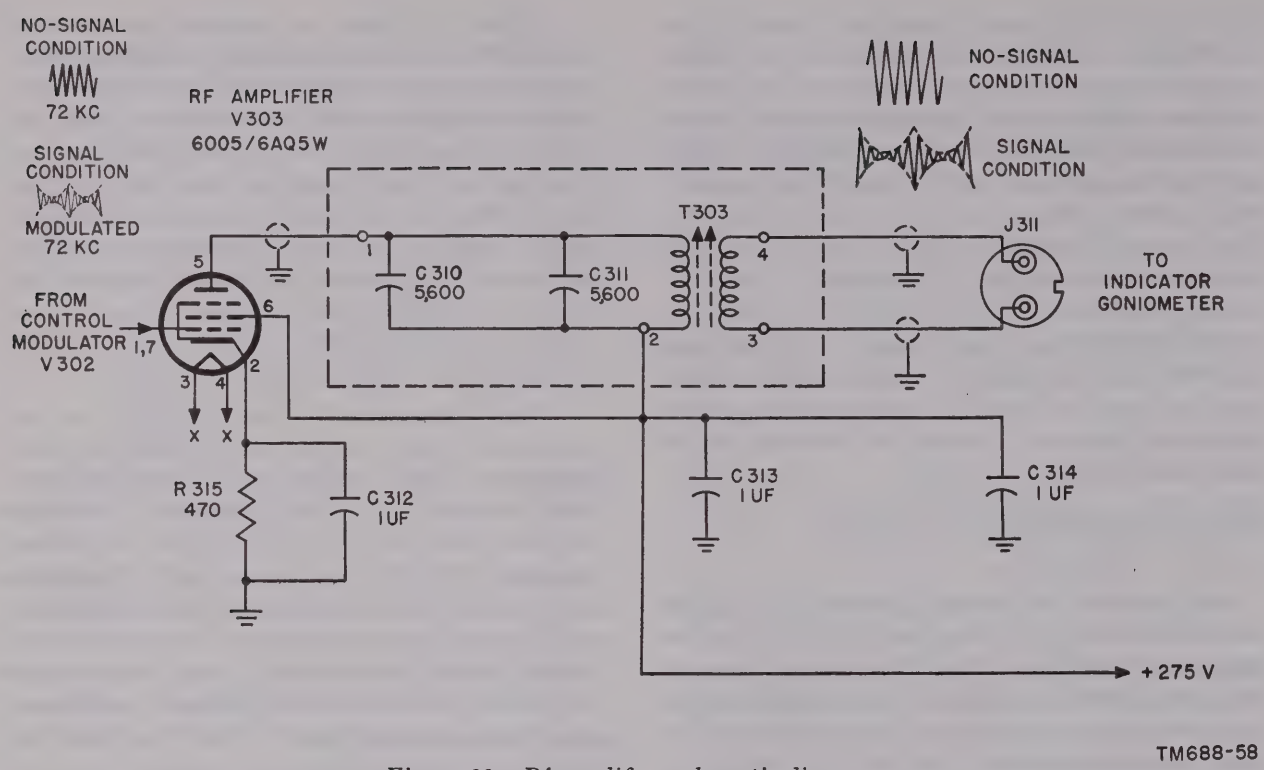

Figure 83. Rf amplifier, schematic diagram.

to enable sufficient sense phasing range. Transformer T302 couples the output of control modulator V302 to rf amplifier V303.

143. Rf Amplifier V303 (fig. 83)

Rf amplifier V303 raises the amplitude-modulated 72-kc signal to the power level required at the input of the indicator goniometer. The grid signal is developed across the secondary of T302 (fig. 82). The primary of T303 is the plate load impedance of V303 and is resonated by C310 and C311. Plate tuning is accomplished by variation of transformer inductance (slug adjustment of T303). Capacitors C313 and C314 bypass the plate supply. Resistor R315 is the cathode bias resistor and C312 is the cathode bypass capacitor. The balanced output of V303 is connected by coaxial cable to J311 on the azimuth indicator which is connected by cable W405 to J405 on the indicator goniometer.

144. Deflection System (fig. 84)

a. During no-signal conditions, the cathode-ray tube displays a filled-in circular pattern. When a signal is received, a propeller pattern is formed. A change in the direction of arrival of a signal causes a change in the phase of the modulation imposed on the 72-kc signal by rotation of the signal goniometer. The change in phase results in a change in the azimuthal position of the tips of the propeller.

b. The indicator goniometer located in the goniometer drive acts as a two-phase transformer inasmuch as a single-phase voltage is impressed on its primary (rotor) and a two-phase (90° removed) output is developed across the north-south and the east-west secondary (stator) windings. The east-west stator winding is connected by coaxial cables W402 and W401 to jack J308 and J307 (fig. 84) on the azimuth indicator. The north-south stator winding is connected by coaxial cables W403 and W404 to J309 and J310 on the azimuth indicator. The two-phase stator voltages are connected through SENSE switch S301 to the primaries of deflection transformers T304 and T305. The indicator goniometer output is raised to a level sufficient for proper cathode-ray tube deflection by vertical deflection transformer T304 and horizontal deflection transformer T305. The slug adjustment of

T304 is provided to compensate for manufacturing tolerances between the vertical and horizontal deflection transformers. Other than the slug adjustment of T304, the vertical and horizontal channels are identical and only the vertical channel is explained in *c* below.

c. Resistors R316 and R317 are terminating resistors for the connections from the indicator goniometer to the primary of T304. The two secondaries of T304 are connected in series for rf by capacitor C319A and C319B. Capacitor C316 and trimmer C315 in parallel with the secondaries of T304 resonate the secondary at 72 kc. Resistor R321 broadens the tuning response. The output of the two secondary windings in series are connected to the vertical deflection plates (pins 7 and 8 of V304).

d. SHAPE control R320 acts as a variable load resistor across the secondary of T304 to reduce the amplitude of the voltage applied to the vertical deflection plates to compensate for the greater deflection sensitivity of the vertical deflection plates. Transformers T304 and T305 employ two secondary windings to enable the application of dc centering voltages to the deflection plates.

145. Sense Circuit
(fig. 84)

a. SENSE switch S301 is a two-position switch shown in figure 84 in the direction finder position. The switch is normally in the direction finder position and is pressed for sense operation. Pressing the SENSE switch performs three simultaneous functions.

(1) Sections 1 and 2 of S301 reverse the indicator goniometer stator connections to the deflection transformers to produce the 90° pattern rotation (par. 139*d*).

(2) The sense relay in the signal goniometer is energized by the application of 115-volt ac through contacts 16 and 18 of section 3 and J303. Energizing the sense relay changes the input to the df receiver from a bearing wave form (B1, fig. 74) to a sense wave form (B3, fig. 74).

(3) The 72-kc blanking signal is applied to the grid of the cathode-ray tube through sense phasing resistor R340, contacts 13 and 15 of section 3 and capacitor C326.

b. The 72-kc output of the rf oscillator is altered in wave form and adjusted in phase to produce half-cycle blanking of the cathode-ray tube. The network consisting of R338, CR304 and R339 shapes the wave form to enable half-cycle blanking and retention of the overall pattern intensity during sense operation. During the positive alternation of the 72-kc signal, germanium diode CR304 conducts, and the forward resistance of CR304 in series with R339 shunts R338, presenting a low overall circuit impedance that permits a small amount of positive voltage to be applied to the cathode-ray tube grid. On the negative alternation of the 72-kc signal, germanium diode CR304 does not conduct and the negative voltage developed across the comparatively large resistance of R338 is sufficient to cut off the cathode-ray tube.

c. Sense phasing resistor R340 adjusts the phase of the 72-kc blanking signal to coincide with the phase of the 72-kc sweep signal. Capacitor C323 is the ground return for the 72-kc sense signal from the rf oscillator.

146. High-Voltage Bleeder
(fig. 84)

a. The high-voltage bleeder is connected across the output of the high-voltage power supply and provides the means of obtaining the voltages necessary for adjusting the beam intensity and focus in addition to the voltages necessary to center the beam. The bleeder consists of R336 (INTENSITY control), R335, R334, R333 (FOCUS control), R332, R331, R330, R329, R325 (HORIZONTAL centering control), R326 (VERTICAL centering control), R328, and R327.

b. The cathode (pin 2) of cathode-ray tube V304 is at a fixed negative potential with respect to ground. The grid (pin 3) voltage is negative with respect to the cathode and is varied by adjustment of INTENSITY control R336 to produce changes in beam intensity. Resistor R335 limits the beam intensity to the proper operating level. The arm of FOCUS control R333 connects to the focusing anode (pin 5) of V304 and provides an adjustable voltage (positive with respect to the cathode) necessary for focusing. Capacitors C323, C322, and C321 bypass the INTENSITY control, cathode of V304, and the focusing anode of V304 respectively.

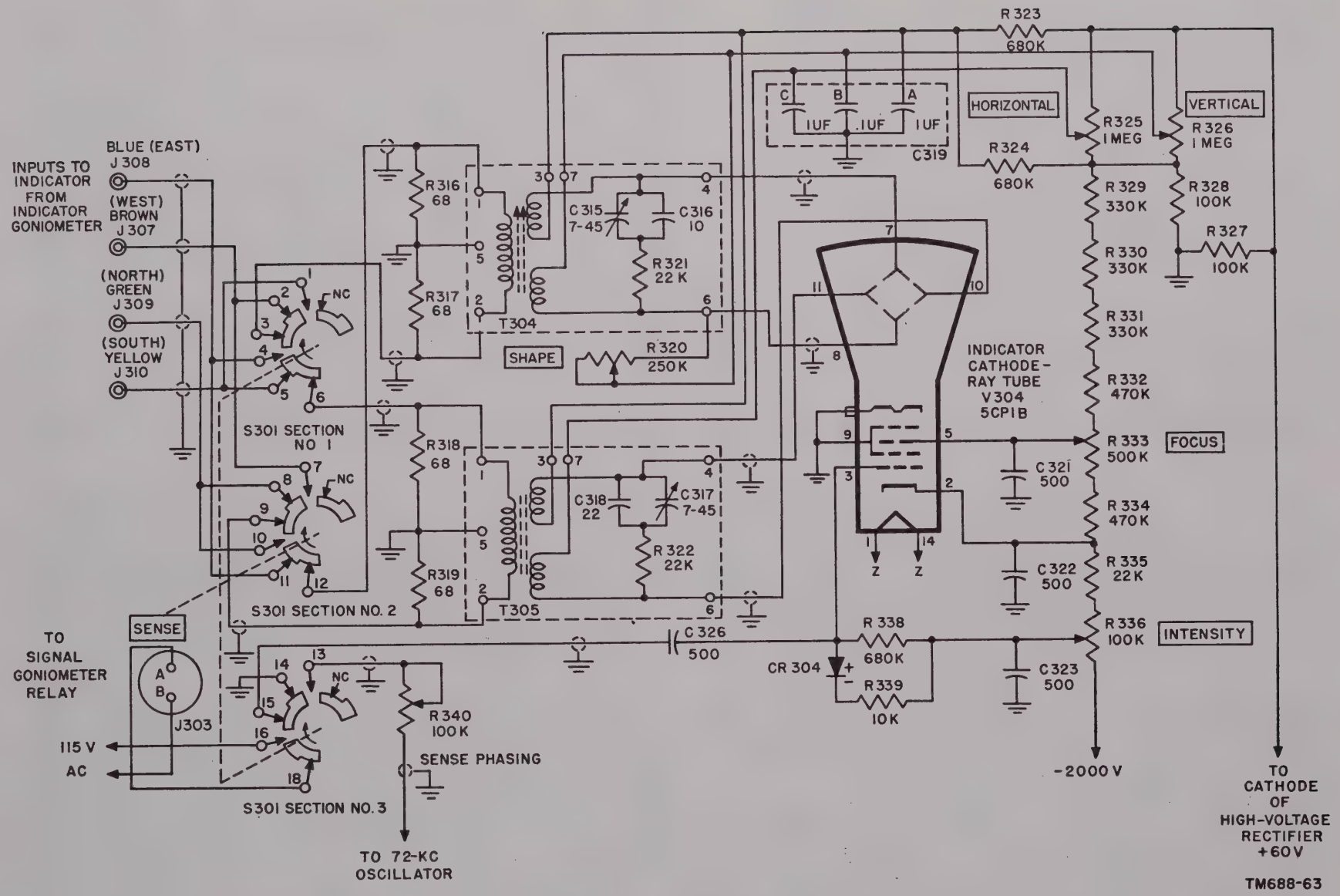

Figure 84. Deflection system, sense and high-voltage bleeder circuits.

c. Resistor R327 is the only resistor in the voltage divider across which a positive voltage (with respect to ground) appears. This resistor is connected between the cathode of high-voltage rectifier V310 and ground and is the same value as R328. The common current flowing through the voltage divider produces the same voltage drop across resistors R327 and R328. The voltage across resistor R328, however, is negative with respect to ground. Therefore, the voltage applied to one side of centering controls R325 and R326 is equal but of opposite polarity to the voltage applied to the other side of these potentiometers. When the variable arms of these controls are set at midpoint, the voltage present between the arms and ground is zero. As the controls are rotated from one side of their midpoint position to the other, the voltage at the arms will vary in level and polarity. The arm of the vertical centering control is connected through one-half of the secondary winding of T304 to one of the vertical deflection plates (pin 8) of V304. Likewise, the arm of the horizontal centering control is connected through one-half of the secondary winding of T305 to one of the horizontal deflection plates (pin 10) of V304. As the dc output voltages at the arms of these controls are varied by rotation of the controls, the vertical and horizontal positions of the illumination on the screen of the cathode-ray tube will vary, and thus permit the display to be centered on the screen prior to operation.

d. The cathode-ray tube current flows through R327 but not through R328; therefore, changing the cathode-ray tube current (varying the INTENSITY control) would affect the position of the beam on the screen. The automatic centering circuit designed to compensate for this is shown in figure 85.

(1) For low intensities (minimum current flow through the cathode-ray tube), the voltages across the two resistors R327 and R328 are equal in amplitude, but of the opposite polarity. Series resistors R323 and R324 are equal in value and connected in parallel with R327 and R328. The voltages across R323 and R324 are equal and the voltage at the junction of the two is zero. One horizontal plate (pin 11) of V304 is connected through one of the secondaries of T305 to the junction of R323 and R324. One of the vertical deflection plates (pin 7) of V304 is connected through one of the secondaries of T304 to the same junction.

(2) For high intensities (max. current flow through the cathode-ray tube),

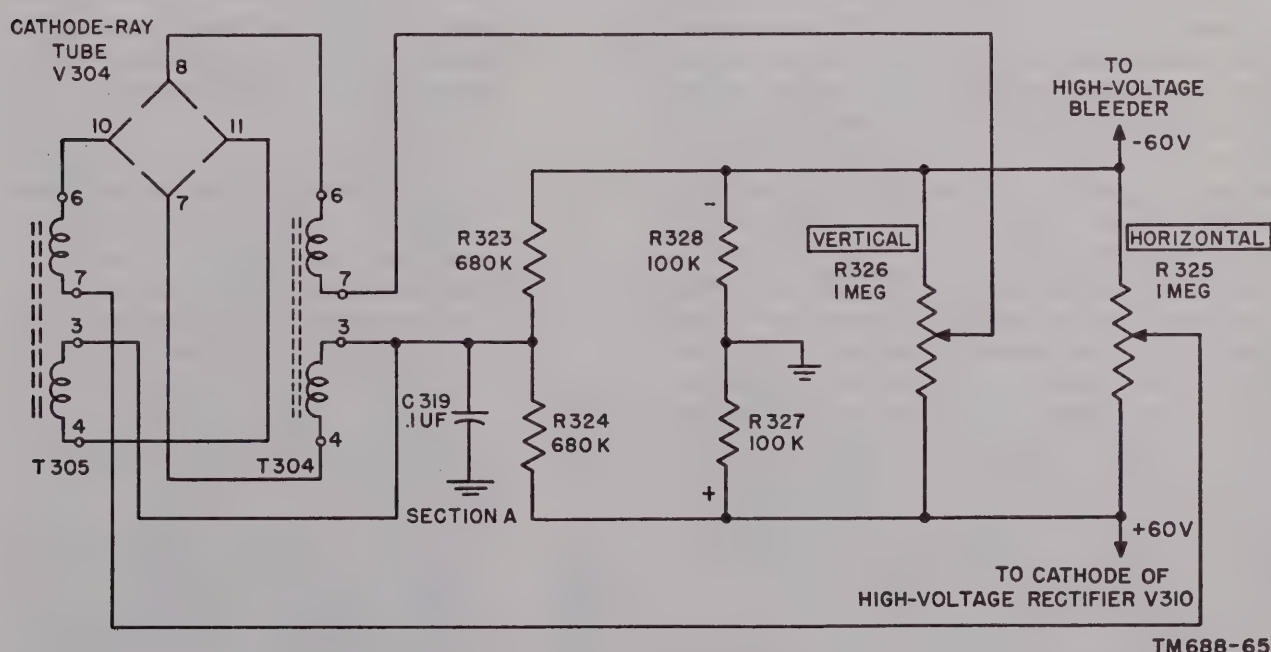

Figure 85. Automatic centering circuit.

the voltage across R327 is increased because of the increased cathode-ray tube current flowing through R327. The voltage across R327 and R328 in series is regulated by the regulation of the high-voltage power supply. When the voltage across R327 increases, the voltage across R328 decreases. This change in voltage across R327 and R328 would cause the beam to change position as the intensity changed. The voltages across R323 and R324, however, remain equal and the junction of the two which was at ground assumes a positive potential when the voltage across R327 is greater than the voltage across R328. The net result is a floating ground on one of the vertical (pin 7) and one of the horizontal (pin 11) deflection plates. The floating ground produces a dc voltage which opposes the dc voltage change at the other plate, thereby maintaining the beam at its original position.

147. Power Control and Regulated Power Supply
(fig. 86)

a. Power Control. The 115-volt, 50- to 60-cps, ac power input to the azimuth indicator is obtained through P302 from J904 on Junction Box J–95B/CRD–2. MAIN POWER switch S303 controls the application of power to the df receiver through J306 and to the rf amplifier through J305. Placing the INDICATOR switch in the ON position illuminates the alidade and applies power to the primary of T306 through fuse F302. With S303 and S304 in the ON positions, placing the GONIO DRIVE switch S302 in the ON position supplies power to the goniometer drive assembly through F301 and J304. Fuse F301 affords overload protection to the drive motor located in the goniometer drive. Power application to the goniometer drive is evident by rotation of the goniometer drive bearing indicator scale. GONIO DRIVE switch S302 also turns on the rf oscillator by grounding the cathode of the rf oscillator.

b. Low-Voltage Power Supply.

(1) *Power transformer T306.* One low-voltage secondary winding of T306 (terminals 6, 7, and 8) furnishes power for the filaments of V301, V302, V303, V306, V307, and V309 and alidade scale lamps E301 through E306 of the alidade assembly. DIMMER control R361 allows variation in the light produced by the lamps. A second low-voltage winding (terminals 9 and 10) provides filament voltage for rectifier V305. A specially insulated winding (terminals 11 and 12) supplies filament voltage to cathode-ray tube V304. The high-voltage secondary winding of T306 provides high voltage ac for application to the plates of rectifier V305.

(2) *Rectifier.* Rectifier V305 is a full-wave rectifier which converts the high-voltage ac to pulsating dc for application to the filter and regulator. The B+ output of the rectifier is taken from one side of the rectifier filaments and is passed through a resistance capacitance (rc) filter composed of resistor R341 and capacitor C327 which removes a considerable amount of the 120-cps ripple. The output of the rc filter is applied to the regulator and hum suppressor circuits.

(3) *Voltage regulator.* The voltage regulator circuit furnishes a stable +275 volts dc output voltage over a wide range of operating conditions despite changes in the output load or the ac line voltage.

(*a*) The output of the filter is connected to the load through series regulator tube V306 (6AS7) which acts as a variable resistance; the value of resistance of V306 is controlled by dc amplifier V307. Resistors R353, B+ voltage adjustment R354, and R355 form a voltage divider across the output load. The control grid of V307 is connected to the arm of R354 to sample the output voltage for control purposes. The cathode of V307 is maintained at constant potential by voltage regulator V308 (gaseous regulator) which serves as a reference element. Resistors R349 and R350 are in series with

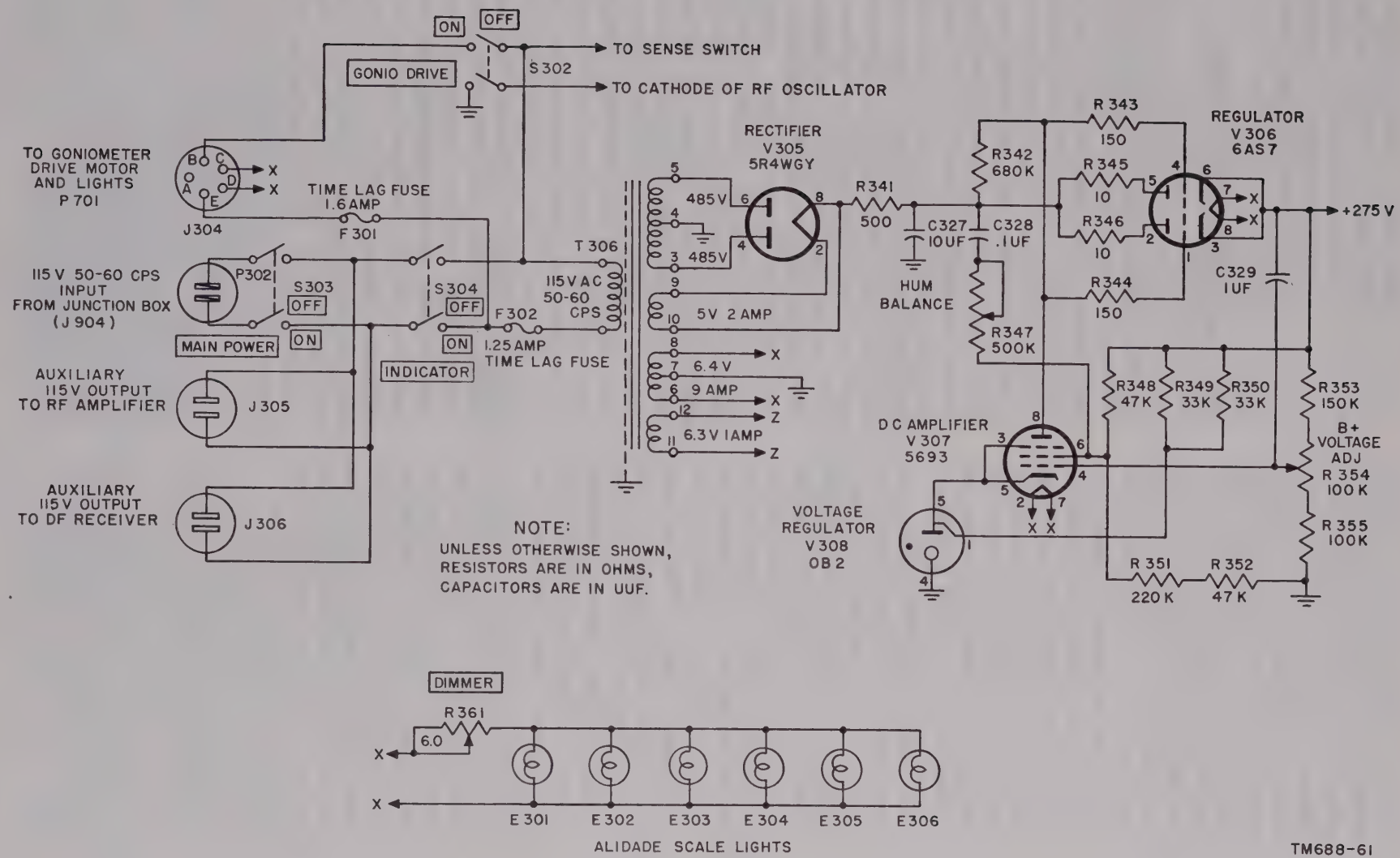

Figure 86. Power supply and voltage regulator, schematic diagram.

V308 to maintain proper ionizing potential and current drain for the gaseous regulator. Proper screen voltage for V307 is obtained from a tap on a voltage divider formed by R348, R351, and R352. Resistors R345 and R346 are current balancing resistors, and R343 and R344 are grid stabilizing resistors for dual triode V306. Resistor R342 is the plate load resistor of V307 across which control voltage for V306 is developed. Hum balance control R347 controls the amplitude and phase of applied hum voltage to the screen of V307. Capacitor C328 serves as a dc blocking capacitor to prevent interaction of dc potentials.

(*b*) With an increase in the +B output across the load, whether due to load or line voltage change, there is a proportionate change in the positive direction upon the grid of V307 inasmuch as the grid is connected to the arm of R354 (a part of the bleeder across the load). Since the cathode of V307 is maintained at a constant voltage by V308, a positive change in the grid potential of V307 produces a corresponding change in plate current. The increased plate current of V307 flowing through R342 increases the voltage drop across that resistor. The grids of V306 are connected to R342; therefore an increase in the bias of V306 results. This increased bias raises the plate resistance of V306. Regulator tube V306 is in series with the load; therefore an increase in its resistance decreases the output voltage tending to balance out the original increase in load voltage. Capacitor C329 enables the regulator to follow rapid changes in load voltage by feeding the change directly to the control grid of V307.

(*c*) A sample of the hum at the output of the filter is applied to the screen grid of V307, the amplitude and phase of which is controlled by R347. In an identical manner as described for load regulation, the resistance of V306 is varied at a hum rate, and thus opposes the alternate increase and decrease of output voltage thereby eliminating the hum.

148. High-Voltage Power Supply (fig. 87)

a. General. The high-voltage power supply is a subchassis called Power Supply PP–988/GRD and is mounted on the azimuth indicator main chassis. The high-voltage power supply employs rf oscillator V309 and high-voltage rectifier V310 to develop —2,000 volts dc required for operation of cathode-ray tube V304 (5CP1B). In addition to supplying the high-voltage required for operation of the cathode-ray tube, the output of the rf oscillator provides the basic indicator sweep frequency and the half-cycle blanking signal required for sense operation. The filament voltage and +275 volts dc required to operate the high-voltage power supply are provided by the azimuth indicator low-voltage power supply.

b. Rf Oscillator. A standard Colpitts oscillator is used with the primary of T307 (high-voltage transformer) serving as the inductive element of the tank. The tank capacitance divider, consisting of C333 and C334, establishes the plate-to-grid feed-back relationship. Capacitor C332 couples the grid of the oscillator to the tank circuit and also serves to block B+ from the grid. Coil L302 provides a vernier frequency adjustment through variation of circuit inductance. The flow of grid current through R359 provides the bulk of oscillator bias. Cathode bias developed by R358 provides protection for the oscillator tube in the event oscillations cease. Coil L303, in conjunction with the screen bypass capacitor (B sec. of C331), serves to prevent rf leakage to the +275-volt supply. The A section of C331 bypasses cathode resistor R358. Resistor R357 is a parasitic suppressor. The cathode is returned to ground through GONIO DRIVE switch S302, to prevent burning the face of the cathode-ray tube when the goniometers are not rotating. The output of the rf oscillator is coupled by high-voltage transformer T307 to high-voltage rectifier V310. Another rf oscillator output is available at terminal 8 on terminal board E320; this output is fed to the

control modulator to provide the indicator sweep and is also fed to the sense phasing adjustment to provide half-cycle blanking during sensing.

c. High-Voltage Rectifier. The filament of high-voltage rectifier V310 (1Z2) is energized from a special secondary winding of T307. Resistor R360 is the filament voltage dropping resistor. The high-voltage secondary of T307 (terminals 3 and 4) drives the plate of the half-wave rectifier. The half-wave rectifier output is then applied to the rc filter consisting of R337, C324, and C325. When the external high-voltage bleeder is connected, a voltage of —2,000 volts with respect to ground is available at terminal 1 on terminal board E320. The filament of the rectifier is approximately +60 volts above ground (terminal 2 on terminal board E320) to supply the necessary positive potential for the beam centering circuits. Capacitor C320 bypasses the filament of rectifier V310 to ground.

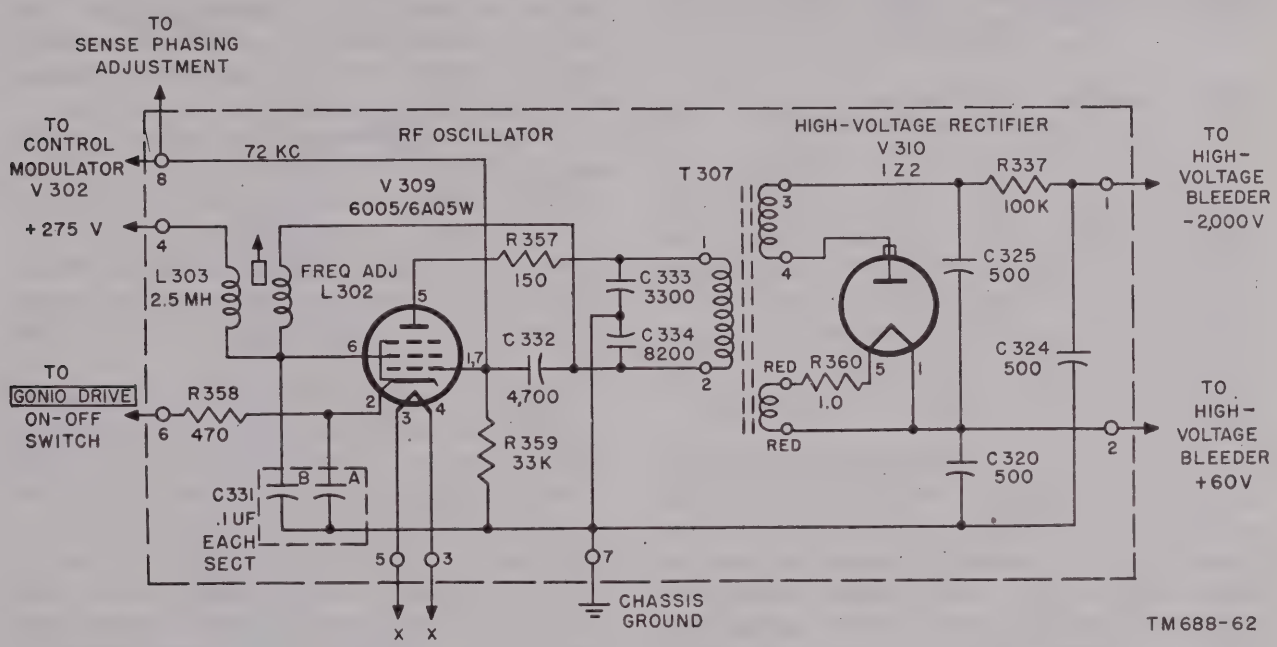

Figure 87. High-voltage power supply, schematic diagram.

Section VIII. THEORY OF RADIO FREQUENCY AMPLIFIER AM–496/TRD–4

149. Block Diagram
(fig. 88)

Radio Frequency Amplifier AM–496/TRD–4 together with the single-loop and sense antennas and a df receiver is used for taking aural bearings of radio transmitters with frequencies between .54 mc and 30 mc. The signal path is shown in figure 88, and a complete schematic is shown in figure 133.

a. Coupling Transformer. Coupling transformer T206 matches the balanced loop antenna circuit to the single-ended circuit that follows and provides the high degree of balance necessary in the loop input circuit.

b. Sense Switch. Sense switch S202 grounds the sense antenna and disables the sense amplifier during direction-finder operation; also in the sense white and sense red positions it adds the sense voltage to the loop voltage, reversing the loop connections for the latter position.

c. Sense Amplifier. Sense amplifier V201 is an untuned amplifier with the output connected to phase inverter V202. During direction finding operation, sense amplifier V201 is disabled by removing the ground connections from the cathode and grounding the grid.

d. Phase Inverter. Phase inverter V202 matches the combined output of the sense amplifier and coupling transformer to the df receiver.

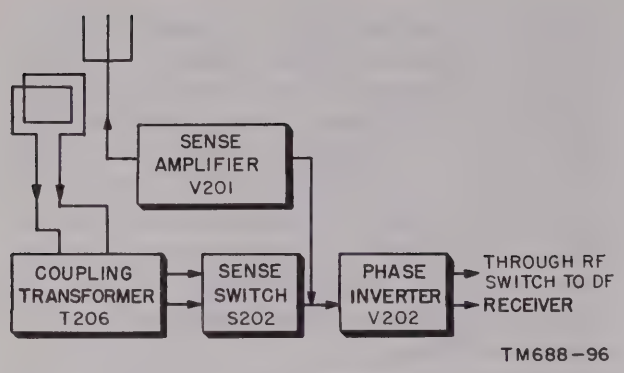

Figure 88. Radio Frequency Amplifier AM-496/TRD-4, block diagram.

150. Coupling Transformer
(fig. 133)

a. The north-south loop of the crossed-loop antenna is connected through a pair of slip rings to the primary of coupling transformer T206. The primary of T206 is balanced to maintain the high degree of symmetry in the loop circuit necessary for direction finder accuracy. The secondary of the coupling transformer, which is unbalanced, is link-coupled to the five rf transformers.

b. Rf transformers T201 through T205 have two combined purposes. They are to serve as selective band-pass filters for the signals received from the single-loop antenna, and to amplify that signal. This provides maximum sensitivity and selectivity over the entire frequency range of the equipment (.54 mc–30 mc).

Transformer	Frequency (mc)
T201	.54– 1.35
T202	1.35– 3.45
T203	3.45– 7.40
T204	7.40–14.80
T205	14.80–30.0

(1) In order that they may be tuned, the five transformers are connected in parallel with variable capacitor C206. In addition, rf transformers T201, T202, and T203 have trimmer capacitors C201, C202, and C203 respectively across the secondary of each for adjusting the band spread to conform to the dial calibration.

(2) Transformer T204 has fixed capacitor C204 and variable capacitor C205A in series with its secondary; T205 has fixed capacitor C207 and variable capacitor C205B in series with its secondary.

c. Grounding resistors R201 and R202 provide a leakage path to ground for any electrostatic charge that might collect on the primary of coupling transformer T206.

151. Sense Amplifier V201
(fig. 89)

a. Sense amplifier V201 amplifies the signal from the sense antenna so that it will be of the proper amplitude for sense operation. The output from sense amplifier V201 is combined with the signal from the single-loop antenna at the grid of phase inverter V202.

b. The output from the sense antenna is connected through a slip ring to the grid (pin 1) of V201. During bearing operation, relay K202 is de-energized (*e* below) and the sense antenna output is grounded. During sense operation, relay K202 is energized and the sense antenna output is developed across grid return resistor R208.

c. Resistors R207, R203, R212, and R213, and SENSE GAIN control R204 form a voltage divider between B+ and ground. Screen grid (pin 6) voltage is tapped off between R203 and the junction of R212 and R213. The suppressor grid (pin 2) and the cathode (pin 7) are returned to ground through fixed resistor R205 and SENSE GAIN control R204. Resistor R205 provides fixed bias for V201, and R204 provides variable bias to control the gain of V201. Cathode bypass capacitor C211 prevents rf from being developed at the cathode.

d. Resistor R206 is the plate load resistor across which the amplified sense-voltage output of V201 is developed. The output of V201 is coupled through coupling capacitor C212 to the grid of phase inverter V202. Capacitor C213 is a supply decoupling capacitor, C209 is the screen bypass capacitor, and C210 is the filament bypass capacitor.

e. Relays K201 and K202 (fig. 133) are single-pole, double-throw relays connected in parallel. When sense switch S202 is in either the sense white or sense red position, 115 volts ac are applied through section 1 of S202 to both relays and both relays are energized. When S202 is in the direction finder position, section 1 of S202 removes the 115 volts from both relays and both relays are de-energized.

(1) When S202 is in the direction finder position, both relays are de-energized. The contacts of K201 ground the sense antenna at the slip ring. The contacts of K202 ground the grid of V201 and remove the cathode ground return.

(2) When S202 is in either the sense white or sense red position, both relays are energized. The contacts of K201 unground the sense antenna and the contacts of K202 unground the grid of V201 and ground R204 (the cathode ground return).

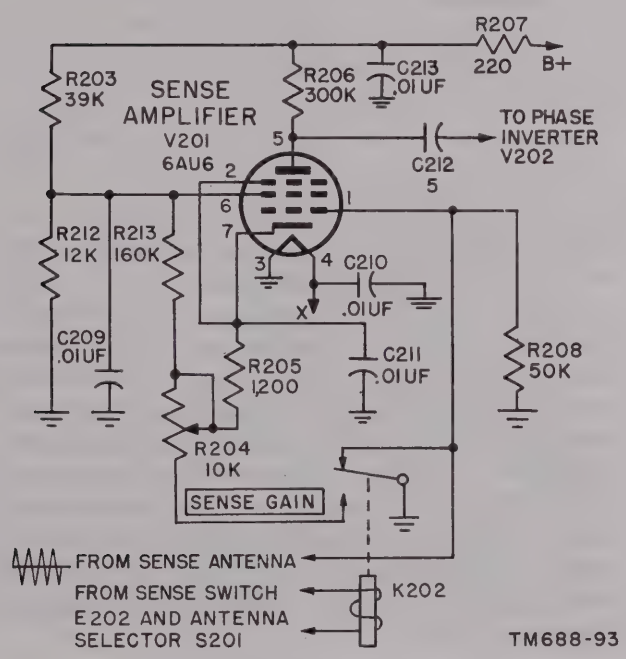

Figure 89. Sense amplifier, schematic diagram.

152. Phase Inverter V202
(fig. 90)

a. Phase inverter V202 provides a balanced rf output which matches the balanced input impedance of the df receiver. During bearing operation, there is one input to V202 which is the signal from the single-loop antenna developed across an rf transformer chosen by BAND SWITCH S203. Transformer T201 shown in figure 90 is used on band 1. The signal developed across the selected rf transformer is fed through section 3 of C203 to the grid (pin 1) of V202. During sense operation, the output of sense amplifier V201 is applied also to the grid of V202. The grid of V202 is returned to ground through the selected rf transformer.

b. The balanced rf output is developed across cathode resistor R209 and plate load resistor R210. These resistors are chosen to match the output impedance of V202 to the input impedance of the df receiver. Coupling capacitors C217 and C216 couple the balanced rf output developed across R209 and R210 to J205. Resistor R211 prevents oscillations. Bias for V202 is developed across cathode resistor R209. Capacitor C215 is the plate supply bypass capacitor, and capacitor C214 prevents rf voltages from appearing across the filament.

153. Power Supply Stage
(fig. 91)

a. POWER switch S204 is a two-position switch located on the front panel of the rf amplifier. In the ON position, 115-volt ac power is applied through F201 and S204 to the primary of power transformer T207, to ANT. SELECT. switch S201, and to sense switch S202. Fuse F201 protects the equipment by opening when the line current exceeds three-eighths ampere. The secondary of T207 consists of three windings: two filament windings and one high-voltage winding.

b. One filament winding (terminals 9 and 10) is not used. The 6.3 volts ac developed across the other filament winding (terminals 6 and 8) are applied to the filaments of V201 through V203 and to pilot lamps E204 through E206.

(1) Pilot lamp E204 lights when sense switch S202 is in the sense red position.

(2) Pilot lamp E205 lights when S202 is in the sense white position.

(3) Pilot lamp E206 illuminates the azimuth scale.

c. The 225 volts ac available at terminals 5 and 3 of the high-voltage winding are applied to the plates of rectifier V203. Rectifier V203 is connected as a full-wave rectifier and converts the ac voltage to a pulsating dc. Inductor L201 and capacitor C219 filter the rectified alternating current.

d. Line filter capacitors C218A and C218B prevent rf voltages from entering the rf amplifier through the 115-volt ac power line.

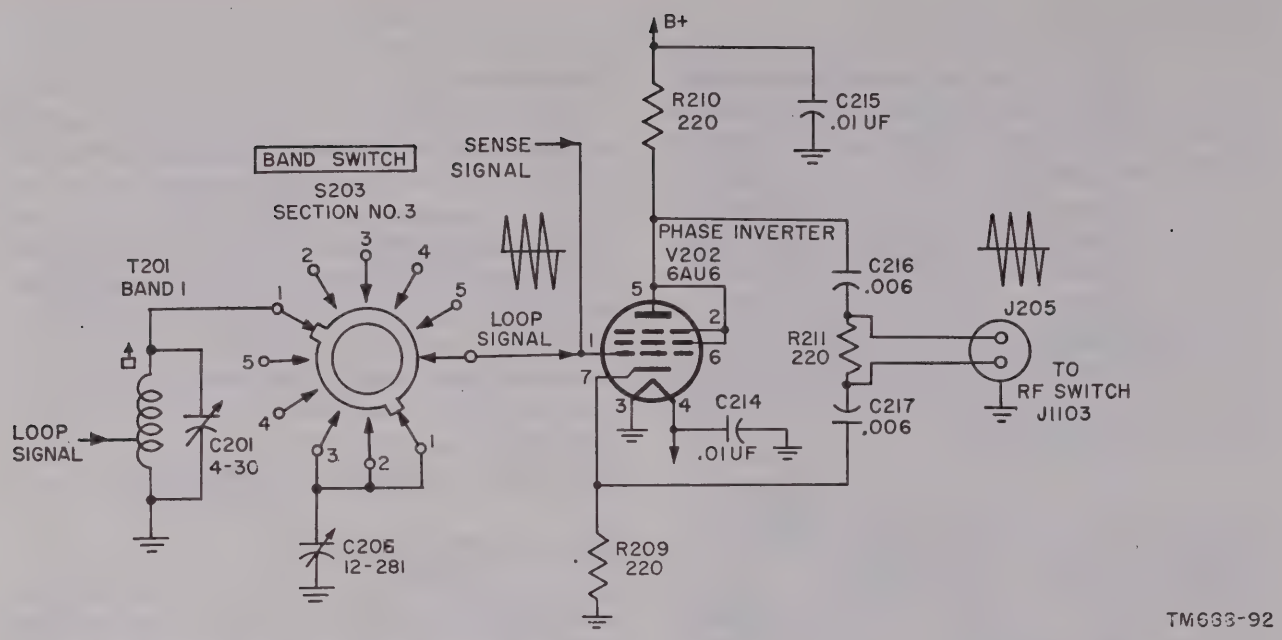

Figure 90. Phase inverter, schematic diagram.

154. Antenna Switching System
(fig. 133)

ANT. SELECT. switch S201 is a three-position, three-section rotary switch.

a. In the CROSSED LOOP position, sections 2 and 3 connect the ends of the north-south loop to a pair of receptacles (J201 and J202) mounted on the outside of the rf amplifier housing. This pair of receptacles, together with an adjacent pair of receptacles (J203 and J204) that are connected to the ends of the east-west loop, permit connection of the crossed-loop antenna to the signal goniometer when using the crossed-loop antenna.

b. In the MONITOR position, section 1 energizes relay K202. The contacts of K202 ground the cathode circuit of the sense amplifier and remove the ground at the point where the sense antenna is connected to the grid of the sense amplifier. In this position, K201 in parallel with K202 is also energized. The contacts of K201 remove the ground from the sense antenna. Sections 2 and 3 of S201 disconnect the north-south loop from the external receptacles J201 and J202.

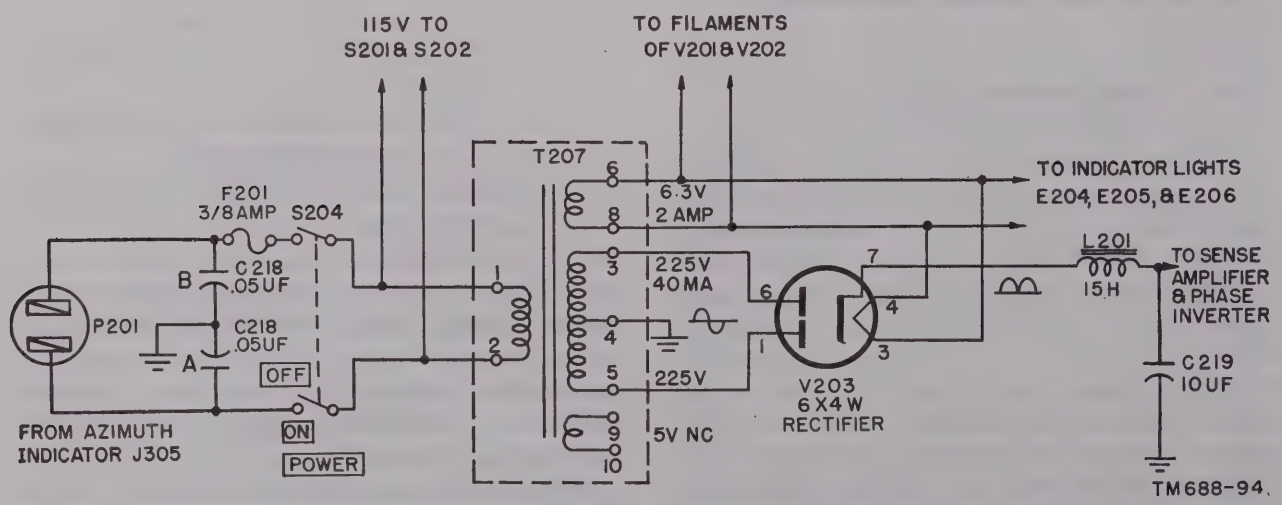

Figure 91. Power supply, schematic diagram.

c. In the SINGLE LOOP position, sections 2 and 3 connect the north-south loop to the primary of coupling transformer T206. Section 1 de-energizes K201 and K202 which grounds the sense antenna and renders the sense amplifier inoperative.

155. Sense Switching System
(fig. 133)

a. Sense switch S202 is a three-section, three-position switch which adds the signal picked up by the sense antenna to the signal impressed on the single-loop antenna. By changing the swtich from one sense position to the other, the polarity of the single-loop signal is reversed for convenience in distinguishing the direct bearing from the reciprocal bearing. When ANT. SELECT. switch S201 is in the SINGLE LOOP position, sense switch S202 operates as follows.

b. In the direction-finder position (midposition) of S202, the secondary of coupling transformer T206 is connected through sections 2 and 3 of S202 and section 1 of BAND SWITCH S203 to one of the rf transformers selected by BAND SWITCH S203. Relays K201 and K202 are de-energized, leaving sense amplifier V201 inoperative and grounding the sense antenna.

c. In the sense white position (up) of S202, there is no change in the connections made by sections 2 and 3 in the direction-finder position (*b* above). The contacts of relays K201 and K202 which are energized through section 1 unground the sense antenna and complete the sense amplifier circuit.

d. In the sense red position (down) of S202, sections 2 and 3 reverse the connections from the secondary of T206 to the rf transformer. Relays K201 and K202 remain energized through section 1, allowing the sense antenna output to be combined with the signal from the single-loop antenna at the grid of phase inverter V202.

156. Band-Switching System
(fig. 133)

a. BAND SWITCH S203 is a three-section, five-position rotary switch. The switching of the primaries of rf transformers T201 through T205 is accomplished by section 1. The coaxial cable from coupling transformer T206 is connected to the wiper arm of section 1. Terminals 1 through 5 are connected to T201 through T205 respectively.

b. The wiper arm of section 3 is connected to the grid of phase inverter V202. The upper contacts of section 3 connect the proper rf transformer through the wiper arm to the grid of V202. The lower contacts connect the capacitance in parallel with the selected rf transformer. On bands 1, 2 and 3, tuning capacitor C206 is connected in parallel with the selected rf transformer. On band 4, C204 in parallel with C205A is connected in series with C206. On band 5, C207 in parallel with C205B is connected in series with C206.

c. Section 2 of S203 grounds the secondaries of the unused rf transformers.

Section IX. THEORY OF POWER AND CONTROL CIRCUITS

157. Radio Frequency Transmission Line Switch SA–346/GRD
(fig. 127)

a. The rf switch is a two-position switch, located on top of the electrical equipment cabinet. It selects the input to the df receiver. The rf switch is in the R.F. AMPLIFIER position during aural-null operation using the single-loop antenna and the df receiver signal comes from the rf amplifier. The rf switch is in the GONIOMETER position during both aural-null and visual operation when either the Adcock or crossed-loop antenna is used and the df receiver signal comes from the signal goniometer.

b. There are two input cables and one output cable connected to the rf switch. One input jack J1103 is connected through cable W205 (fig. 138) to J205 on the rf amplifier. The other input jack J1102 is connected through cable W501 (fig. 138) to J405 or J505 on the signal goniometer. The output jack J1101 is connected through cable W304A (fig. 138) to J108 on the df receiver.

c. In the R.F. AMPLIFIER position, the rf switch performs the following two functions (fig. 127):

(1) The signal from the rf amplifier at J1103 is connected through the rear

section of the rf switch to output jack J1101 and is cabled to the df receiver.

(2) The signal from the signal goniometer at J1102 is grounded by the front section of the rf switch.

d. In the GONIOMETER position, the rf switch performs the following two functions (fig. 127):

(1) The signal from the signal goniometer at J1102 is connected through the rear section of the rf switch to output jack J1101 and cabled to the df receiver. Resistors R1101 and R1102 match the output impedance of the signal goniometer to the input impedance of the df receiver.

(2) The signal from the rf amplifier at J1103 is grounded by the front section of the rf switch.

158. Block Diagram of Ac Power Distribution (fig. 92)

The power required for the operation of Direction Finder Set AN/TRD–4A can be obtained from any available 115-volt ±10 per cent, 47- to 63-cps, single-phase, 5,000-watt power source. Figure 92 is a block diagram of the power control circuits. Any one of three available generators may be selected by Switch Box SA–345/U which is mounted near the power units. Electrical Power Cable CX–2380/U connects the power from the switch box to a terminal box inside the shelter. Two branch circuits distribute the power from the terminal box. One circuit distributes power through the circuit breaker to the convenience outlets, the blower, and the heater. The other circuit distributes power through Junction Box J–95B/CRD–2 to the electrical equipment cabinet, the communication receiver, and the intercept receiver.

159. Switch Box SA–345/U (fig. 128)

a. The 115-volt ac power required to operate Direction Finder Set AN/TRD–4A comes from one of three power sources (fig. 92) connected to Switch Box SA–345/U. A selector switch located on the front panel of the switch box connects the selected power source to the direction finder set.

b. The three power sources are connected to the terminals marked GEN–1, GEN–2, and

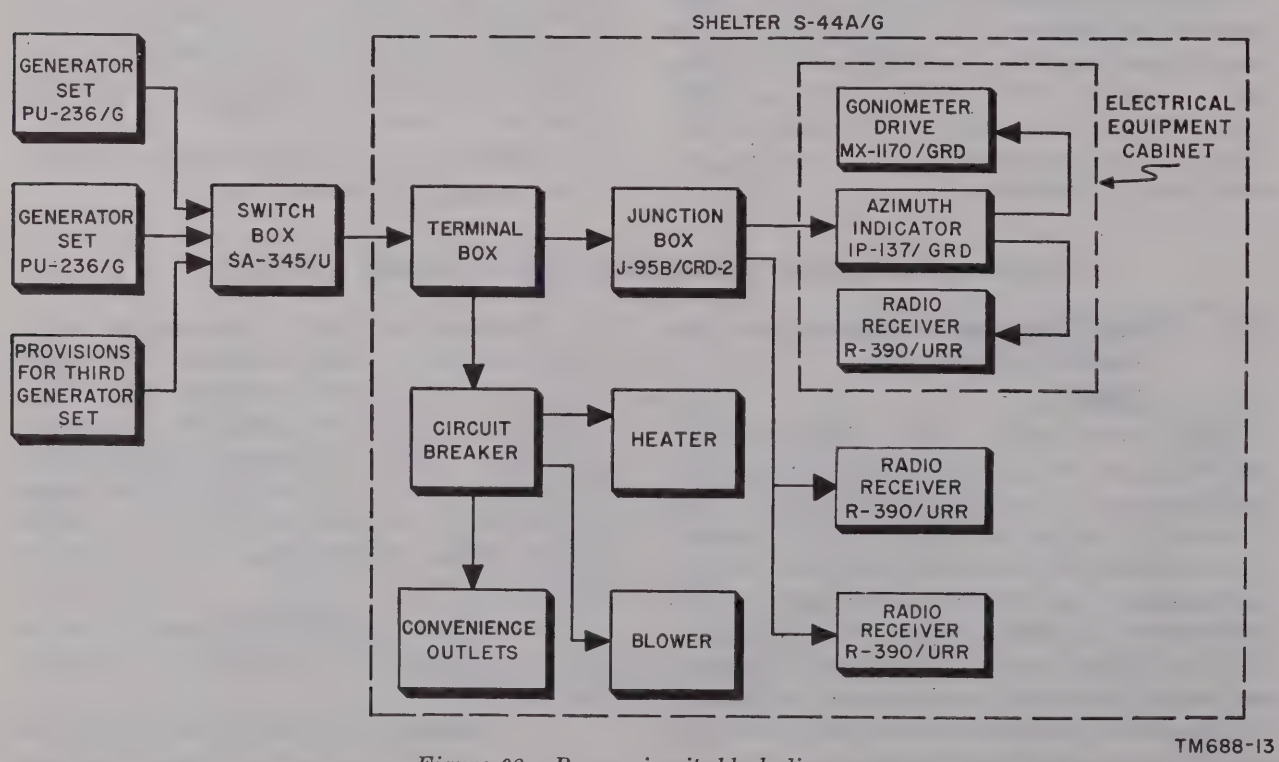

Figure 92. Power circuit, block diagram.

GEN–3 on INPUT terminal board E802. Selector switch S801 is a four-position switch that connects the input power to the terminals marked A, B, C, D, and E on OUTPUT terminal board E801 and to CONVENIENCE OUTLETS J801 and J802. In the ON 1 position, GEN–1 terminals are connected through terminals 2 and 6 of S801 to E801, J801, and J802. In the ON 2 position, GEN–2 terminals are connected through terminals 3 and 7 of S801, J801, and J802. In the ON 3 position, GEN–3 terminals are connected through terminals 4 and 8 of S801 to E801, J801, and J802. In the OFF position, no power is connected through the switch to the output terminals.

160. Heater, Blower, and Convenience Outlets

Power for the convenience outlets, the shelter heater and blower is fed through a terminal box mounted in the shelter and a manual reset circuit breaker mounted on the end wall of the shelter roof section. The tripping current for this circuit breaker is 57.5 amperes (115% of the rated current).

161. Junction Box J–95B/CRD–2 (fig. 129)

a. The 115-volt ac power from the terminal box is connected through Junction Box J–95B/CRD–2 to the electronic equipment. The output of the junction box can be adjusted to approximately 115 volts by means of OUTPUT VOLTAGE CONTROL S902. There are two possible inputs to the junction box. A 230-volt ac power source may be connected to the 230 V. receptacle P901. A 115-volt ac power source may be connected to the 115 V. receptacle P902. The 230-volt line is fused by circuit breaker K901, which is tripped by a line current of 5 amperes. The 115-volt line is fused by circuit breaker K902, which is tripped by a line current of 10 amperes. The circuit breakers are reset by pressing the push-to-reset buttons.

b. LINE INPUT switch S901 connects the input power to the proper tap on autotransformer T901. In the 230 V. position of S901, 230 volts are applied between terminals 1 and 11 of T901. In the 115 V. position of S901, 115 volts are applied between terminals 1 and 6 of T901. OUTPUT VOLTAGE CONTROL S902 is a nine-position switch that selects one of taps 2 through 10 on T901. When S901 is in the 115 V. position, the taps on T901 and the voltage control permit operation of the equipment from a 103- to 127-volt input and in the 230 V. position, permit operation of the equipment from a 207- to 253-volt input. The OUTPUT VOLTAGE CONTROL is set on the position that gives the reading closest to 115 volts on OUTPUT VOLTAGE meter M901. LINE FREQUENCY meter M902 is a reed-type frequency meter that indicates the frequency of the input and output of the junction box.

c. The OUTPUT LOAD switch S903 is a three-position switch that connects the 115-volt output from T901 to either the dummy load or electronic equipment.

(1) In the DUMMY position, the 115-volt output is applied to the dummy load, which consists of resistors R901 through R904 connected in parallel.

(2) In the EQUIPMENT position, the 115-volt output is applied to AC OUTPUT jacks J901 through J905.

(3) In the OFF position, the 115-volt output is disconnected.

162. Power Circuits for Electronic Equipment

a. General. The communication receiver power cable is connected to AC OUTPUT jack J903 on the junction box (fig. 138). The intercept receiver power cable is connected to a convenience outlet mounted on the operators table (fig. 138). The convenience outlet is connected through W903 to AC OUTPUT jack J901 on the junction box. The power required for operation of the direction finding components of Direction Finder Set AN/TRD–4A is connected through the azimuth indicator. The ac power distribution within the direction finding components is shown in figure 93.

b. Azimuth Indicator. Input power receptacle P302 on the azimuth indicator is connected through cable W901 to AC OUTPUT jack J904 on the junction box. The 115-volt input to P302 is connected through MAIN POWER switch S303, INDICATOR switch S304, and 1¼-ampere fuse F302 to the primary of power transformer T306, which supplies all the power required to operate the azimuth indicator.

c. Rf Amplifier. The 115-volt ac power input to the rf amplifier is connected through MAIN POWER switch S303 on the azimuth indicator to J305 on the azimuth indicator. Jack J305 is connected through cable W902 to receptacle P201 on the rf amplifier. The rf amplifier ac line is filtered by capacitor C218A and C218B and is fused by ⅜-ampere fuse F201. The ac power is applied through POWER switch S204 to the primary (terminals 1 and 2) of power transformer T207. Sense switch S202 and ANT. SELECT. switch S201 are connected in parallel and are placed in series with one side of the ac line connecting the ac voltage across the primary of T207 to relays K201 and K202. When S202 is in either of the sense positions (2 and 3) or S201 is in the MONITOR position, 115 volts are applied to relays K201 and K202.

d. Goniometer Drive.

(1) The 115-volt ac power input to the goniometer drive is connected through MAIN POWER switch S303, INDICATOR switch S304, GONIO DRIVE switch S302, and 1.6-ampere fuse F301 to pins B and E on J304 on the azimuth indicator. Jack J304 is connected through cable W701 to P701 on the goniometer drive. The 115 volts between pins B and E of P701 are connected to goniometer drive motor B701.

(2) The 6.4-volt ac developed across terminals 6 and 8 of the secondary of T306 in the azimuth indicator are connected to pins C and D of J304, which is connected through cable W701 to P701. The 6.4 volts between pins C and D of P701 are connected to dial lamps E701 and E702.

(3) The 115-volt input to the azimuth indicator is also connected through S303, S304, F301, and SENSE switch S301 to J303. When S301 is pressed for sense operation, terminals 16 and 18 of S301 are shorted and 115 volts are between pins A and B of J303. Jack J303 on the azimuth indicator is connected through cable W301 to P401 (P501) on the signal goniometer. If the low-frequency goniometer (GO–5/GRD) is used, W301 is connected to P401. If the high-frequency goniometer (GO–6/GRD) is used, W301 is connected to P501. The 115-volt input to the signal goniometer is applied to sense relay K401 (K501).

e. Df Receiver. The 115-volt ac power input to the df receiver is connected through MAIN POWER switch S303 to J306 on the azimuth indicator. The df receiver power cable is connected from POWER jack J104 on the df receiver to J306 on the azimuth indicator.

Section X. THEORY OF RADIO TRANSMITTER T–279/UR

163. Block Diagram
(fig. 94)

Radio Transmitter T–279/UR is a low-power, amplitude-modulated or cw target transmitter. The radio transmitter covers a frequency range of .50 to 30 mc in six bands (par. 7). The signal path is shown in figure 94 and a complete schematic diagram is shown in figure 135.

a. Rf Oscillator. The output frequency of the Hartley-type oscillator V601 is determined by a resonant circuit. The particular frequency range desired is obtained by selecting the proper inductance, and the frequency is varied within this range by adjusting a variable capacitor.

b. Rf Amplifier. Rf amplifier V602 amplifies the rf oscillator output and isolates the rf oscillator from the antenna circuit. Isolation prevents variations in the output capacitance from affecting the frequency of the rf oscillator.

c. Af Oscillator. Af oscillator V603 produces an af voltage that is applied to the grid of the rf amplifier when an amplitude-modulated signal is desired.

d. Relaxation Oscillator. Neon lamp E601 in the neon lamp relaxation oscillator flashes intermittently (about once every 2 sec.) to indicate that the radio transmitter is on. The relaxation oscillator circuit also produces an audible tick on the transmitted signal for identification purposes.

e. Power Supply. The power supply for Radio Transmitter T–279/UR consists of one 1.5-volt Battery BA–404/U and one 135-volt Battery BA–424/U.

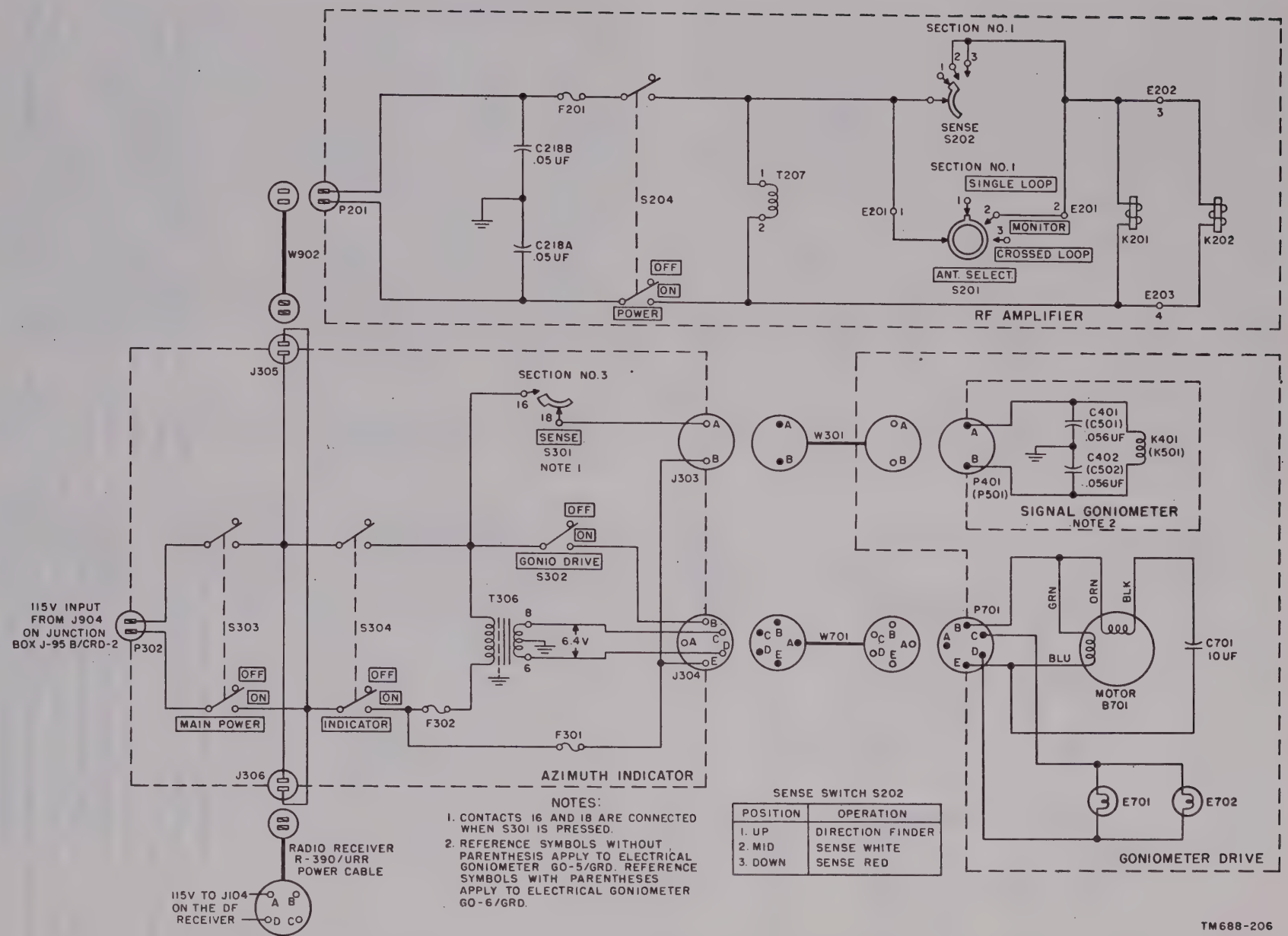

Figure 93. Ac power distribution to the direction finding components.

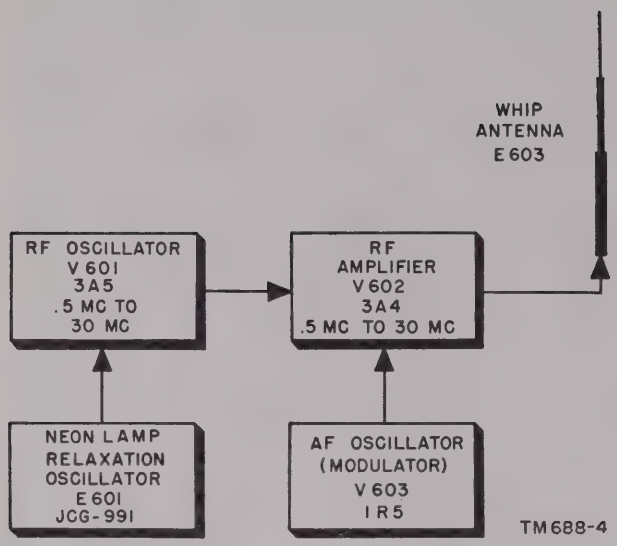

Figure 94. Radio Transmitter T-279/UR, block diagram.

164. Rf Oscillator V601
(fig. 95)

a. The rf oscillator stage uses a dual-triode type 3A5 tube connected in a conventional series-fed, Hartley oscillator circuit. The circuit is designed to operate on any frequency within the range of .5 to 30 mc. This range is divided into six bands, anyone of which may be selected by BANDSWITCH S603. Sections 2 and 3 of S603 connect one of the six tapped coils L601 through L606 into the rf oscillator tuned circuit. The switch is shown in figure 95 in the .5–1MC position. Tuning control C601 varies the capacitance in the rf oscillator tuned circuit to select the desired frequency within the selected band. Trimmer capacitor C602 is used to vary the capacitance of the rf oscillator tuned circuit so that the rf oscillator will track correctly with the rf amplifier stage.

b. The circuit does not permit grounding of either end of the coils, therefore two switch sections must be used to select the proper coil. Each switch section (fig. 135) has a shorting bar that places all but the active coil at ac ground to minimize energy absorption by the unused coils.

c. The circuit oscillates because a voltage of 180° out of phase with the plate voltage is obtained from the grid end of the tuned circuit. This voltage, which is of the proper phase and magnitude to sustain oscillation, is fed back to the grid through capacitor C603. Grid current that flows on the positive alternations charges C603 through the low cathode-to-grid resistance of V601. Only a small portion of this charge is allowed to leak off on negative alternations since R601 presents a relatively large discharge path. After several cycles a residual charge is accumulated on C603, which is effectively a negative bias between the grid and the cathode. Capacitors C604 and C615 and coil L613 form a decoupling filter at the oscillator frequency and isolate this stage from the B+ supply to prevent interaction with other circuits. Capacitor C607 couples the rf oscillator output to rf amplifier V602.

165. Rf Amplifier V602
(fig. 96)

a. Rf amplifier V602 amplifies the output from the rf oscillator and isolates the rf oscillator from the antenna. Isolation prevents changes in antenna capacitance (caused by movement of the operator) from being reflected directly back into the tank circuit of the rf oscillator, causing a frequency shift. Thus, the rf oscillator is more stable and less susceptible to outside influences.

b. The signal from the rf oscillator is coupled through coupling capacitor C607 to the grid of V602. The modulating signal from the af oscillator is coupled through C609, R607, and R605 to the grid of V602.

c. Rf amplifier V602 is a pentode-type 3A4 tube used in a Class C amplifier circuit. The plate and screen grid voltages, and therefore the radiated signal strength, are controlled by OUTPUT control R609. Resistor R610 is in series with R609 to limit the current if the stage becomes detuned. There are six coils in this stage (L607 through L612), which have inductances similar to those in the rf oscillator stage. These coils are not tapped, and one end of each is grounded through bypass capacitors C613 and C617. Thus, only one switch section of S603 (sec. 1) is required by this stage. Unused coils in this stage are also shorted to prevent the absorption of energy by the unused coils. Tuning capacitor C612 is ganged to rf oscillator tuning capacitor C601 so that only one tuning control is required.

d. On positive alternations of the input signal from V601, grid current through V602 (through the low cathode to grid resistance of

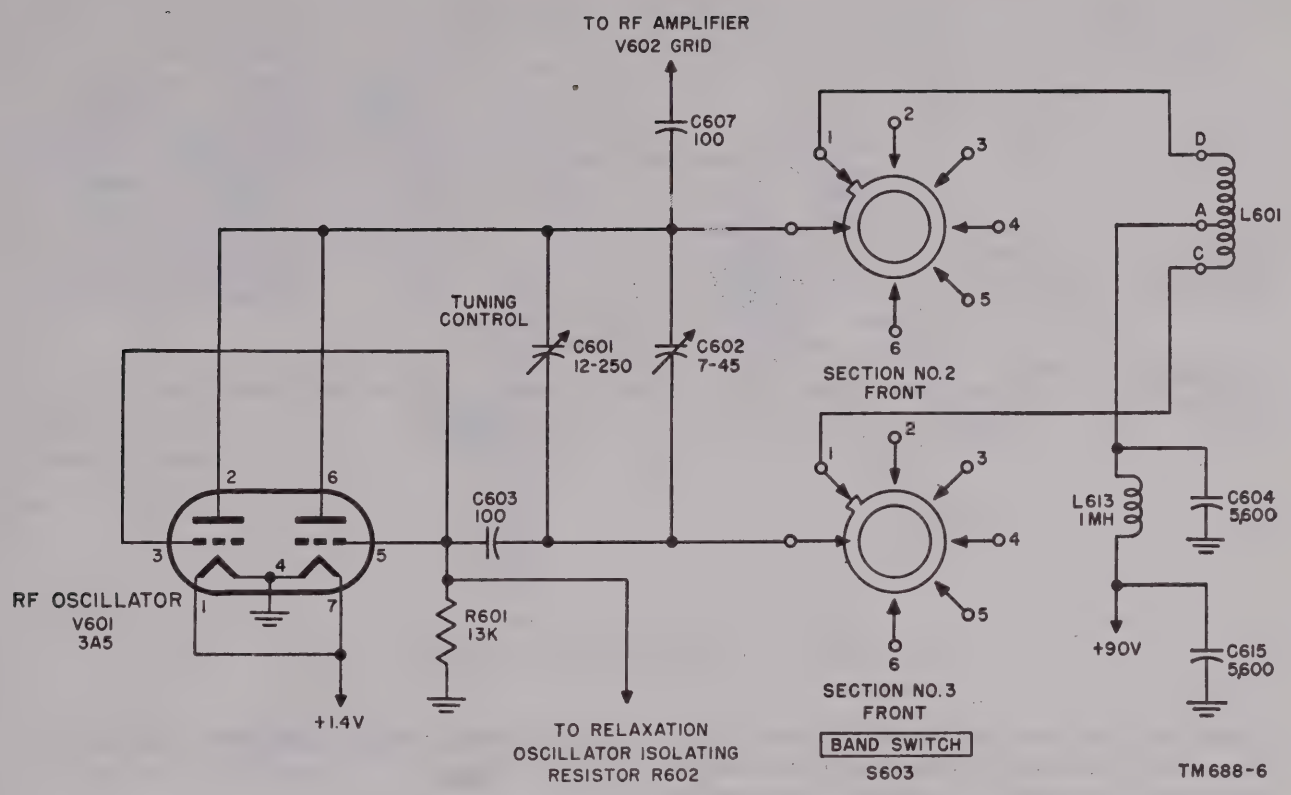

Figure 95. Rf oscillator, schematic diagram.

the tube) charges capacitor C607 negatively on the V602 grid side. On negative alternations of the signal from V601, only a small portion of the negative charge on C607 can leak off through the high resistance of V602 grid resistors R605 and R606. After several cycles of the signal from V601, C607 acquires an average negative charge, which is effectively a negative bias between grid and cathode of V602. The output of V602 is coupled to the antenna through capacitor C611. Resistor R608 is the screen dropping resistor, and C610 is the screen bypass capacitor.

166. Af Oscillator V603
(fig. 97)

a. Af oscillator V603 uses a pentagrid-type 1R5 tube in an oscillator circuit, which uses the negative resistance characteristics of the injector grid (pin 6) to maintain oscillations. In a conventional vacuum tube, it is expected that an increase in control grid voltage will cause a corresponding increase in plate current. In the negative-resistance oscillator circuit, the concept does not follow.

b. In figure 97, capacitor C614 may be regarded as the key element in the circuit. In the absence of C614, a decrease in screen grid (pin 3) voltage results in a corresponding decrease in screen grid current. However, when C614 is in the circuit, the negative voltage at the screen grid is coupled to the injector grid (pin 6). The injector grid distributes the current emitted from the cathode to the screen grid and plate. A negative voltage at the injector grid repels a greater number of electrons back to grid No. 2 (part of the screen grid). The net result is an increase in screen grid current until the potential at the screen grid reaches the point where no further increase in the attraction of electrons is possible. At this point, the magnitude of the negative-going voltage fed back to the injector grid (pin 6) starts to decrease. This is, in effect, a positive-going voltage on the injector grid and the process reverses. The frequency of oscillation (approx. 800 cps) is determined by the time constant of capacitor C614 and resistor R613. The output of the af oscillator is coupled through C609 to the grid of the rf amplifier.

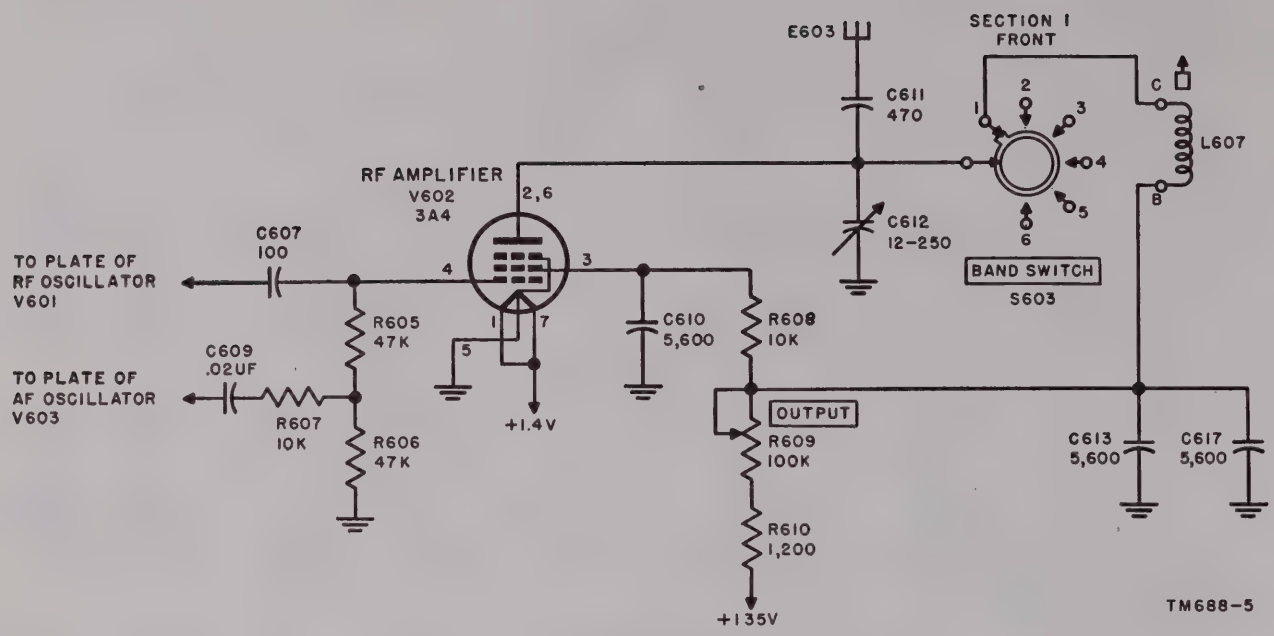

Figure 96. Rf amplifier, schematic diagram.

Capacitor C608 and resistor R607 constitute a decoupling network to prevent rf present on the control grid of the rf amplifier from affecting the operation of the af oscillator. Resistor R612 is the screen grid dropping resistor and R611 is the plate load resistor.

c. Filament voltage (1.4 volts) is obtained through CW-MCW switch S602 and TRANSMITTER switch S601. When S602 is in the MCW position and S601 is in the ON position, 1.4 volts are applied to the filament of the af oscillator and the af signal output is applied to the grid of the rf amplifier. The af signal increases and decreases the bias, varying the gain of the rf amplifier at an audio rate. The amplitude of the rf carrier that is amplified by the rf amplifier is amplitude-modulated at an audio rate.

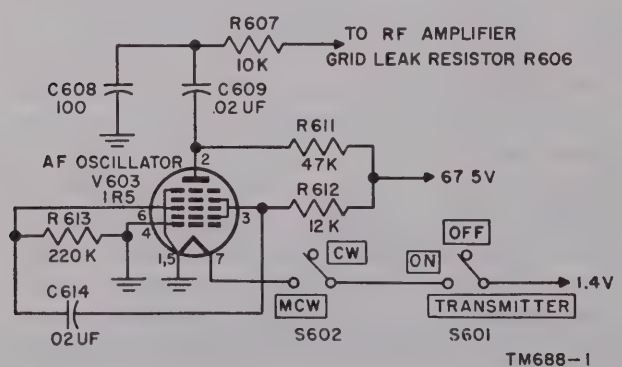

Figure 97. Af oscillator, schematic diagram.

167. Neon Lamp Relaxation Oscillator E601

(fig. 98)

a. Neon lamp E601 in conjunction with capacitor C606 and resistor R604 forms a relaxation oscillator circuit. The +135 volts applied through TRANSMITTER switch S601 to R604 in series with C606 slowly charges C606. When the voltage on C606 is approximately 75 volts, the neon gas in E601 ionizes and E601 appears as a short across C606. Capacitor C606 discharges through E601 until the voltage drops to approximately 60 volts. When the voltage across E601 reaches 60 volts, the gas is no longer ionized and the resistance of E601 rises to a high value to allow the voltage across the capacitor to build up again and repeat the cycle.

b. Each time the capacitor discharges through the neon bulb, the bulb flashes. Because of the time constant of resistor R604 and capacitor C606 and the ionizing and deionizing potentials of E601, the bulb flashes approximately every 2 seconds. The flashing of the bulb is an indication that the TRANSMITTER switch is in the ON position. Each time the bulb flashes a voltage pulse is applied to the grid of the rf oscillator through the

coupling capacitor C605. This voltage pulse superimposes an audible tick on the rf carrier, which is an aid in identifying the transmitter signal at the receiver. Resistors R602 and capacitor C616 form an rf decoupling network to isolate the relaxation oscillator from the rf grid voltage in the rf oscillator. The tick will be heard regardless of the position of CW-MCW switch S602.

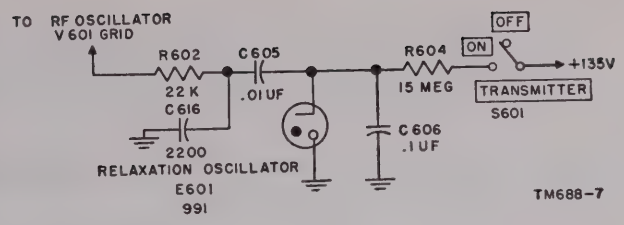

Figure 98. Neon lamp relaxation oscillator, schematic diagram.

CHAPTER 6

FIELD MAINTENANCE

Note.—This chapter contains information for field maintenance. The amount of repair that can be performed by units having field maintenance responsibility is limited only by the tools and test equipment available, and by the skill of the repairman.

Section I. TROUBLESHOOTING AT FIELD MAINTENANCE LEVEL

168. Troubleshooting Procedures

The first step in servicing a direction finder set is to sectionalize the fault. Sectionalization means tracing the fault to the major component or circuit responsible for the abnormal operation of the set. The second step is to localize the fault. Localization means tracing the fault to the defective part responsible for the abnormal condition. Some faults such as a burned-out resistor, rf arcing, shorted transformers, and mechanical troubles can often be located by sight, smell, and hearing. The majority of faults, however, must be localized by checking voltage and resistance.

a. System Sectionalization. System sectionalization is discussed in paragraph 99.

b. Component Sectionalization and Localization. The tests listed below aid in isolating the source of the trouble. To be effective the procedure should be followed in the order given. Remember that the servicing procedure should cause no further damage to the equipment. First, trouble should be localized to a single stage or circuit; then the trouble may be isolated within that stage or circuit by appropriate voltage, resistance, and continuity measurements. The service procedure is summarized as follows:

(1) *Visual inspection.* The purpose of visual inspection (par. 97) is to locate any visible trouble. Through this inspection alone, the repairman may frequently discover the source of the trouble. This inspection is valuable in avoiding damage to the equipment that might occur through improper servicing methods and in forestalling future failures.

(2) *Equipment performance checklist.* The operational test (par. 101, 102, and 103) is important because it frequently indicates the general location of trouble. In many instances, the information gained will determine the exact nature of the fault. To use this information fully, all symptoms must be interpreted in relation to one another.

(3) *Troubleshooting chart.* The trouble symptoms listed in paragraphs 173, 174, 181, 184, 189, 194, and 198 will aid greatly in localizing trouble. When other tests fail to indicate the trouble or when several possible faults are indicated, the resistance and voltage measurements included here will often make possible prompt location of the fault. Resistor and capacitor color codes are shown in figures 122 and 123.

169. Test Equipment Required for Field Maintenance

The test equipment required for troubleshooting Direction Finder Set AN/TRD–4A is listed below with the technical manual associated with the equipment.

Test equipment	Technical manual
Multimeter TS–352/U	TM 11–5527
R. F. Signal Generator Set AN/URM–25	TM 11–5551
Electron Tube Test Set TV–7/U	TM 11–5083
Oscilloscope OS–8/U	TM 11–1214
Electronic Multimeter TS–505/U	TM 11–5511

Section II. TROUBLESHOOTING IN GONIOMETER DRIVE MX–1170/GRD AND ELECTRICAL GONIOMETERS GO–5/GRD AND GO–6/GRD

170. Troubleshooting Data

The materials supplied in this manual will help in the rapid location of faults. Consult the following troubleshooting data. Refer also to paragraphs 125 through 132 on theory.

Fig. No.	Description
99	Goniometer Drive MX–1170/GRD, top view.
100	Location of parts in goniometers.
124	Goniometer Drive MX–1170/GRD, complete schematic diagram.
125	Electrical Goniometer GO–5/GRD, complete schematic diagram.
126	Electrical Goniometer GO–6/GRD, complete schematic diagram.

171. Test Equipment Required for Troubleshooting Goniometer Drive and Goniometers

The test equipment required for troubleshooting Goniometer Drive MX–1170/GRD and Electrical Goniometers GO–5/GRD and GO–6/GRD is listed below with the technical manual associated with the equipment.

Test equipment	Technical manual
Multimeter TS–352/U	TM 11–5527

172. Operational Test of Goniometer Drive and Goniometers

Operate the equipment as described in the equipment performance check list in paragraph 102. This check list is important because it frequently indicates the general location of trouble.

173. Troubleshooting Chart, Goniometer Drive MK–1170/GRD

Symptom	Probable trouble	Correction
1. Lamps E701 or E702 do not light.	Defective lamp	Replace lamp.
2. Drive motor does not operate	*a.* Blown fuse F301	*a.* Replace F301 located in azimuth indicator (fig. 102) with time lag fuse, Littelfuse Slo-Blo, 1.6 amperes.
	b. Defective starting capacitor C701	*b.* Replace capacitor.
	c. Defective power supply from azimuth indicator.	*c.* Refer to paragraph 181.
	d. Defective drive motor B701	*d.* Replace drive motor.
3. Both E701 and E702 do not light and drive motor does not operate.	Defective cable W701	Replace cable.
4. Pattern rotates in one direction	Plunger on goniometer rotor not inserted in slot in goniometer drive.	Press pencil into hole at end of goniometer and rotate bearing indicator scale until click is heard, indicating that plunger has fallen into slot.

Note. For location of parts, refer to figure 99.

174. Troubleshooting Chart, Electrical Goniometers GO–5/GRD and GO–6/GRD

Symptom	Probable trouble	Correction
1. Sense pattern interrupted on azimuth indicator or pattern becomes ragged.	Vibration of sense relay contacts causing intermittent connection of sense circuit to signal goniometer.	Adjust contact alignment of sense relay K401 or K501; clean and burnish relay contacts (par. 203).
2. No sense pattern	*a.* When trouble has been sectionalized to goniometer, it may be caused by open or grounded circuit.	*a.* Inspect and repair goniometer wiring.
	b. Defective sense relay K401 or K501	*b.* Replace sense relay.
3. Weak or indefinite pattern with Adcock antenna.	*a.* Electrical Goniometer GO–5/GRD, S401 fails to open.	*a.* Replace switch.
	b. Electrical Goniometer GO–6/GRD, S501 fails to close.	*b.* Replace switch.
4. Weak or indefinite pattern with crossed-loop antenna.	*a.* Electrical Goniometer GO–5/GRD, S401 fails to close.	*a.* Replace switch.
	b. Electrical Goniometer GO–6/GRD, S501 fails to open.	*b.* Replace switch.

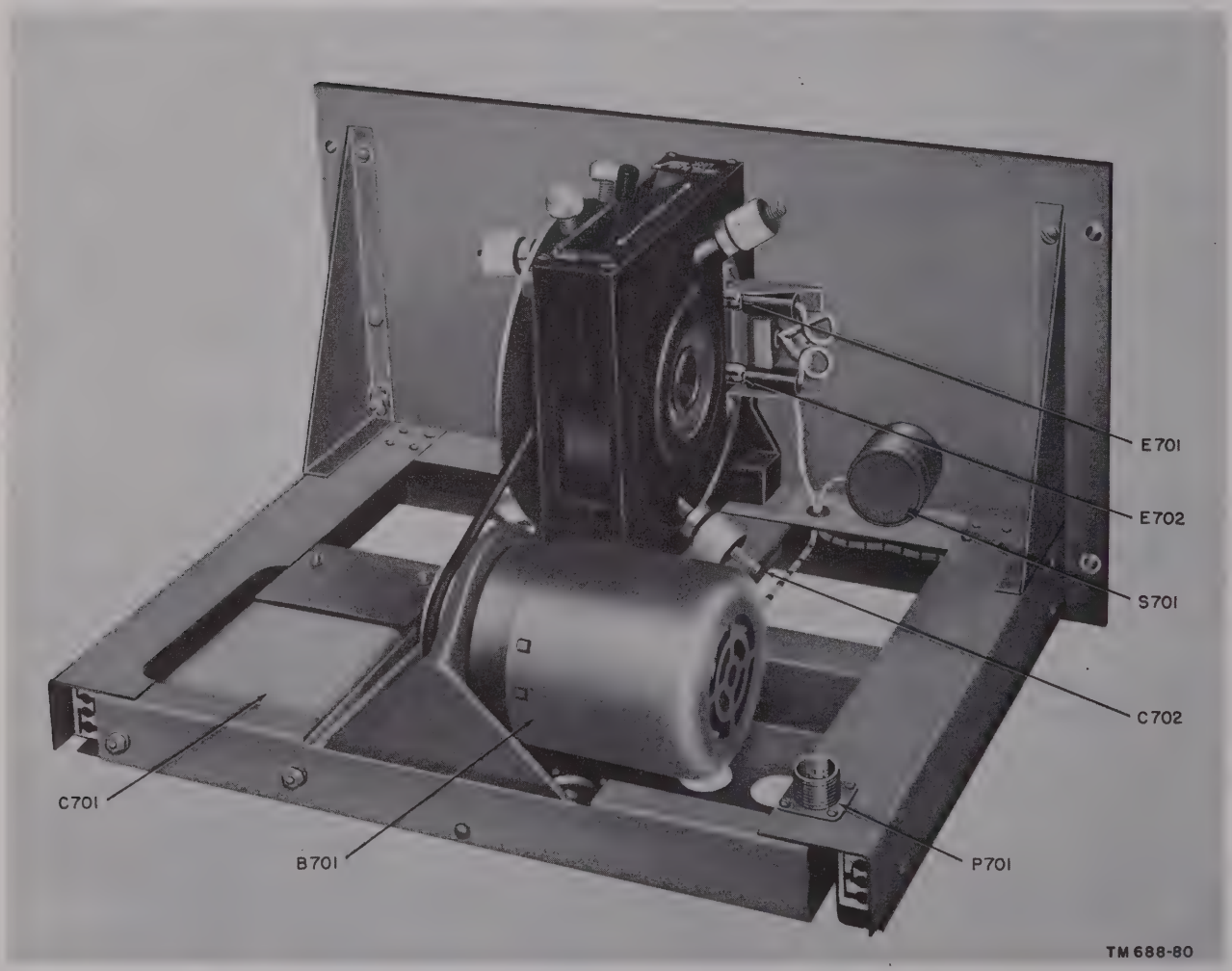

Figure 99. Goniometer Drive MX–1170/GRD, top view.

175. Dc Resistance of Transformers and Coils, Electrical Goniometer GO–5/GRD

The dc resistance of the transformer windings and the coils of Electrical Goniometer GO–5/GRD are as follows:

Transformer or coil	Terminals	Ohm
L401	J401–J402	.40
L402	J403–J404	.40
T401	Pins of J405	.21

176. Dc Resistance of Transformers and Coils, Electrical Goniometer GO–6/GRD

The dc resistance of the transformer windings and the coils of Electrical Goniometer GO–6/GRD are as follows:

Transformer or coil	Terminals	Ohm
L501	J501–J502	.22
L502	J503–J504	.22
L503	Across coil	.02
T501	Pins of J505	.14

Section III. TROUBLESHOOTING IN AZIMUTH INDICATOR IP–137/GRD

177. Troubleshooting Data

The illustrations listed below will be helpful in rapid location of faults in the azimuth indicator.

Fig. No.	Description
101	Azimuth Indicator IP–137/GRD, voltage and resistance measurements at tube sockets.
102	Azimuth Indicator IP–137/GRD, top view.
103	Azimuth Indicator IP–137/GRD, bottom view, left side.
104	Azimuth Indicator IP–137/GRD, bottom view, right side.
105	Azimuth Indicator Power Supply PP–988/GRD, top view.
106	Azimuth Indicator Power Supply PP–988/GRD bottom view.
127	Rf switch, schematic diagram.
131	Azimuth Indicator IP–137/GRD, complete schematic diagram.
132	Azimuth Indicator IP–137/GRD, wiring diagram.

178. Test Equipment Required for Troubleshooting Azimuth Indicator

The test equipment required for troubleshooting in Azimuth Indicator IP–137/GRD is listed below with the technical manuals associated with the test equipment.

Test equipment	Technical Manual
R. F. Signal Generator Set AN/URM–25	TM 11–5551
Electron Tube Test Set TV–7/U	TM 11–5083
Multimeter TS–352/U	TM 11–5527
Oscilloscope OS–8/U	TM 11–1214
Electron Multimeter TS–505/U	TM 11–5511

179. General Precautions

Whenever the azimuth indicator is serviced, observe the following precautions carefully:

a. Be careful when the screen shield is removed from the high-voltage supply, because a 2,000-volt potential is exposed. When the bottom plate of the azimuth indicator is removed, equally dangerous voltages are exposed at the terminal board which mounts the INTENSITY and FOCUS potentiometers and associated resistors.

b. When replacing a cathode-ray tube, apply soapy water to the rubber grommets or the tube may be broken during removal.

180. Operational Test of Azimuth Indicator

a. If the azimuth indicator is connected to its associated components as in normal operation, operate the equipment as described in the equipment performance check list (par. 101). This checklist, when followed, frequently indicates the general location of trouble. The azimuth indicator can be checked apart from its associated components by the following procedures in *b* through *e* below.

b. Connect an indicator goniometer (Electrical Goniometer GO–5/GRD) to connectors J307, J308, J309, J310, and J311 on the rear of the azimuth indicator chassis. Use cords and connectors indicated in figure 138.

c. Connect a 115-volt 50- to 60-cps ac power source to P302 and turn on and test equipment in accordance with instructions outlined in the equipment performance check list (par. 101).

d. A diametral line 4 inches long (with less than one-half setting of the SIZE control) will

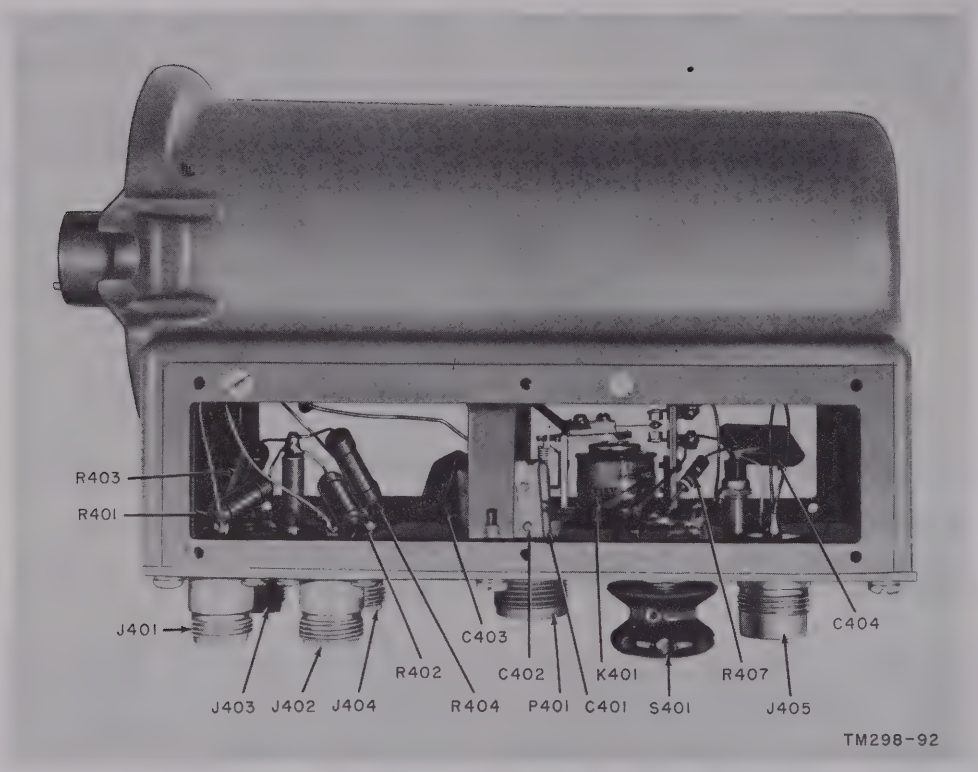

Figure 100. Location of parts in goniometers.

appear if the equipment is functioning properly and the line will rotate as the goniometer is rotated; also, when the sense switch is depressed the line will change to a radial line.

e. Refer to TM 11–5551, R. F. Signal Generator Set AN/URM–25, and set the controls on the signal generator to obtain a 455-kc signal. Connect the signal generator output to J302 on the rear of the azimuth indicator chassis. This signal will reduce the length of the line to a dot with sufficient signal generator output to check the operation of the if amplifier and detector circuits.

181. Troubleshooting Chart, Azimuth Indicator

The following chart is supplied as an aid in locating trouble in the azimuth indicator. This chart lists the symptoms that the repairman observes, either visually or audibly, while making a few simple tests. Once the trouble has been localized to a stage or circuit, a tube check and voltage and resistance measurements of this stage or circuit should ordinarily be sufficient to isolate the defective part. Normal voltage and resistance measurements are given in figure 101.

Symptom	Probable trouble	Correction
1. No pattern (cathode-ray tube dark) sound normal, dial lighted.	*a.* Low or no B+ voltage	*a.* Check V305, V306, V307, and V308. Replace defective tube. Make voltage and resistance measurements. Replace defective component.
	b. No high voltage at terminal 1 (fig. 105) on high-voltage power supply.	*b.* Check V310 and V309. Replace defective tube. Make voltage and resistance measurements. Replace defective component.
	c. Improper voltages at cathode-ray tube (V304).	*c.* Check voltage and resistance measurements at V304.
	d. Defective cathode-ray tube V304	*d.* Replace V304 (par. 206).

Symptom	Probable trouble	Correction
2. No sound, pattern normal	*a.* Disconnected or defective cable W302 to loudspeaker.	*a.* Repair or replace cable.
	b. Defect in df receiver	*b.* Refer to radio receiver troubleshooting chart (par. 184).
	c. Defective loudspeaker LS301 or transformer T308.	*c.* Replace.
3. No pattern, dial lights out, sound normal, goniometer drive motor normal.	No power to transformer T306	Check fuse F302 in azimuth indicator. If open, replace with 1.25-ampere, Bussman SLO-BLO fuse. *Note.* A standard 1.25-ampere fuse will not take starting surge.
4. No signals, circular pattern only, dial lights on, no noise pattern at maximum RF GAIN.	*a.* Defective rf switch	*a.* Repair or replace.
	b. Defective goniometer-to-rf switch cable W501.	*b.* Repair or replace cable.
	c. Defective rf switch-to-df receiver cable W304A.	*c.* Repair or replace cable.
	d. Defective df receiver	*d.* Refer to radio receiver troubleshooting chart (par. 184).
	e. Faulty signal goniometer	*e.* Replace signal goniometer.
	f. If operating on crossed-loop antenna rf amplifier ANT. SELECT. switch not set to CROSSED LOOP.	*f.* Reset selector switch.
5. Inaccurate bearings	*a.* Damaged antenna cable (W101, W102, W103, or W104).	*a.* Replace defective cable with matched spare cable (par. 212).
	b. Octantal errors, maximum error occurs eight times in 360°.	*b.* No remedy, make the correction for octantal error from figure 50.
	c. Accidental ground in signal or indicator goniometer or connecting cables to produce unbalance.	*c.* Check resistance to ground.
	d. SHAPE control improperly adjusted	*d.* Refer to operating instructions (par. 67*f*).
6. Goniometer drive does not operate. Power source normal. Straight line pattern under no signal condition.	Fuse open (F301)	Replace with time lage fuse Littelfuse SLO-BLO, 1.6 ampere. *Note.* A standard 1.6-ampere fuse will not take starting surge.
7. Circular pattern only, sound normal.	*a.* Defective input if cable W303A from df receiver to azimuth indicator or loose cable connections.	*a.* Tighten or replace cable.
	b. If amplifier V301 defective	*b.* Replace V301. Check voltage and resistance at tube sockets.
	c. Defective detector stage (CR301, CR302, or CR303).	*c.* Replace.
8. Erratic pattern, sound normal	Rectifier CR301 defective, loose if cable W303A connection.	Replace or tighten.
9. Propeller not sharp at tip, sound normal.	Rectifier CR302 or CR303 defective	Replace.
10. Dot pattern only in center of screen, sound normal.	*a.* Azimuth indicator-to-indicator goniometer cable W405 defective or loose connection.	*a.* Replace or tighten cable.
	b. Control modulator V302 defective	*b.* Replace.
	c. Rf amplifier V303 defective	*c.* Replace.
	d. Defective indicator goniometer	*d.* Replace.
	e. RF GAIN control on df receiver set up too high.	*e.* Reduce rf gain.

Symptom	Probable trouble	Correction
11. Under no signal conditions stationary straight line pattern north and south or east and west.	Loose connection in one of four signal goniometer-to-azimuth indicator cables (W401, W402, W403, or W404).	*a.* Tighten cable.
	b. One indicator goniometer stator open. Worn contacts in switch S301 section 1 or 2.	*b.* Replace indicator goniometer or switch S301.
12. Signals from all directions indicate same bearing.	*a.* Loose connection in one of four indicator goniometer-to-azimuth indicator cables (W401, W402, W403, or W404).	*a.* Tighten cable.
	b. Worn contacts in switch S301 section 1 or 2.	*b.* Replace switch.
	c. One-half of antenna disconnected because of loose cable connection W101, W102, W103, W104, or W201, W202, W203, W204.	*c.* Tighten cable.
13. Bearings from all directions off by same amount in same direction.	*a.* Improperly oriented signal goniometer.	*a.* Orient signal goniometer with antenna (par. 48).
	b. If using aural-null operation improperly oriented index mark.	*b.* Orient goniometer drive bearing indicator scale with antenna (par. 50).
14. No sense pattern. Signal pattern normal, sound normal.	*a.* Signal goniometer relay K401 or K501 inoperative (listen for click).	*a.* Refer to goniometer troubleshooting chart (par. 174).
	b. Defective sense switch S301	*b.* Replace.
15. Double propeller pattern when sense switch is depressed. Sound normal.	*a.* Defective blanking circuit, rectifier CR304.	*a.* Replace.
	b. Improperly adjusted SENSE phasing potentiometer R340.	*b.* Readjust: refer to alinement procedure (par. 217*j*).
16. Weak signal, pattern	Wrong signal goniometer	Use high-frequency goniometer (Electrical Goniometer GO–6/GRD) with 23-foot antennas and low-frequency goniometer. (Electrical Goniometer GO–5/GRD) with 28-foot antennas (par. 20).
17. Bearing error at 90°, 180°, 270°, or 360°.	Unbalance in antenna caused by poor electrical connection at loading disk, or any of the mast connections, ground connection, cable connectors, or damaged cable.	Inspect all connections and tighten. If error prevails, substitute new antenna cable between one of antenna masts and signal goniometer. Try each antenna in turn using same cable.
18. Bearing error at 45°	Unequal amplitude from pair of antennas	
	a. Loose ground strap.	*a.* Inspect for poor connection and tighten.
	b. Defective resistors in base of antenna	*b.* With an ohmmeter, check two resistors in base of each Adcock antenna. Measure between connector center pin and connector base (ground); and between connector center pin and top plate. Resistance of similar resistors in all four masts must match within 1 per cent.
19. Bearing appears in wrong quadrant.	One pair of antenna cables reversed at antenna, at signal goniometer or at rear of azimuth indicator.	Connect cables properly (fig. 138).
20. Bearing shift with df receiver tuning.	*a.* Df receiver selectivity setting too sharp.	*a.* Set selectivity to 4-kc bandwidth.
	b. Regeneration in receiver if system	*b.* Check for defective parts in receiver if system.
		c. Aline receiver. Refer to TM 11–856.

Symptom	Probable trouble	Correction
21. When goniometer drive bearing indicator scale is rotated to 45°, pattern does not follow accurately.	Improper voltage on horizontal and vertical deflection plates.	Readjust SHAPE control. Retune horizontal and vertical deflection transformers T305 and T304 (par. 217*d* and *e*). Substitute new indicator goniometer and if error persists, substitute new cathode-ray tube V304 (par. 206).
22. Weak or indefinite sense pattern.	Defective SENSE switch in signal goniometer.	Refer to goniometer troubleshooting chart (par. 174).
23. Pattern rotates in one direction.	Plunger on goniometer rotor not inserted in slot in goniometer drive.	Press pencil into hole at end of goniometer and rotate bearing indicator scale until click is heard indicating plunger has fallen into slot.

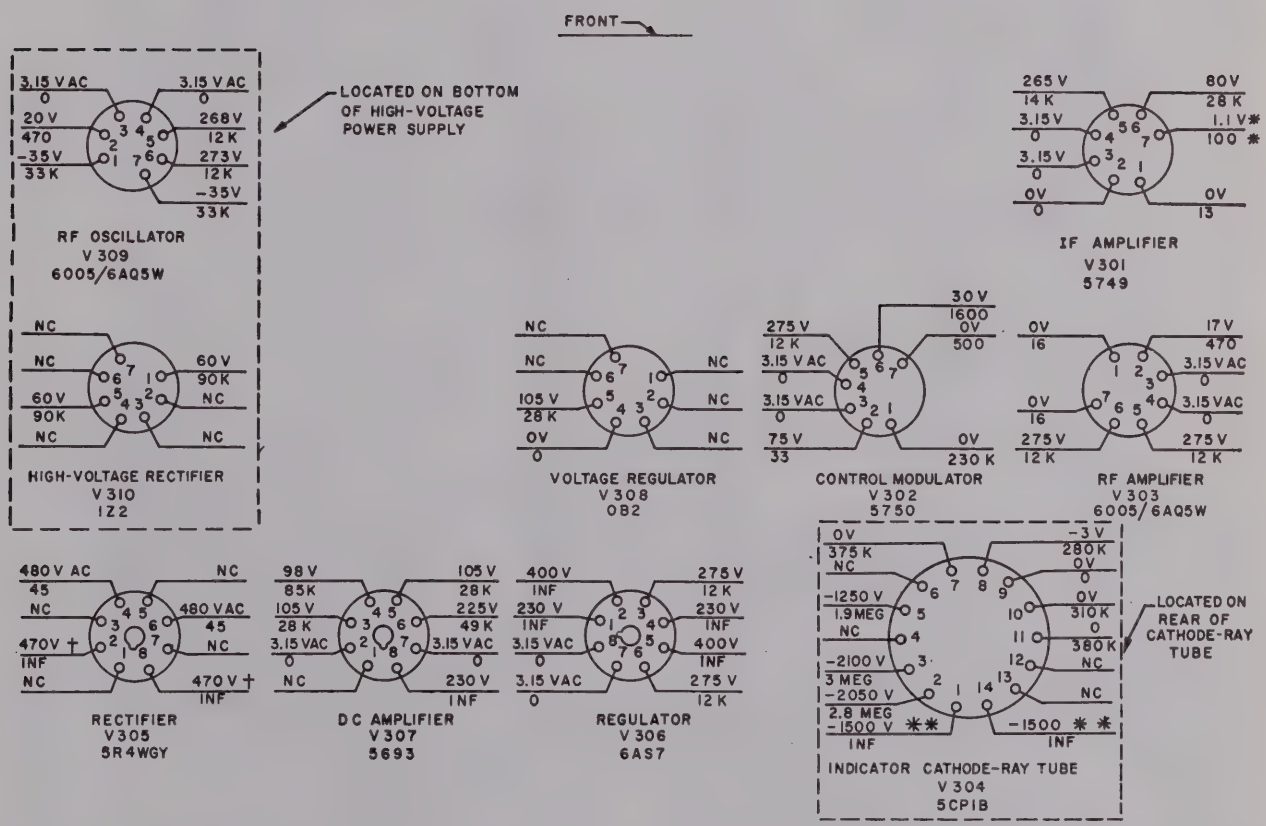

NOTES:

1. LINE VOLTAGE 115 V AC.
2. VOLTAGES AND RESISTANCES MEASURED TO GROUND UNLESS OTHERWISE NOTED, 20,000 OHMS-PER-VOLT METER USED.
3. RESISTANCE READINGS WITH ALL SWITCHES OFF.
4. ALL RESISTANCE READINGS TAKEN WITH RESPECT TO GROUND.
5. RESISTANCE VALUES ARE IN OHMS UNLESS OTHERWISE NOTED.
6. N C INDICATES NO CONNECTION.
7. INF INDICATES INFINITE.
8. VOLTAGE READINGS TAKEN WITH ALL SWITCHES ON AND OTHER CONTROLS ADJUSTED FOR NORMAL NO-SIGNAL CIRCULAR PATTERN.

* AT MAX I F GAIN
** 6.3 V AC BETWEEN 1 AND 14, V304
† 5 V AC BETWEEN 2 AND 8, V305

TM688-49

Figure 101. Azimuth Indicator IP-137/GRD, voltage and resistance measurements at tube sockets.

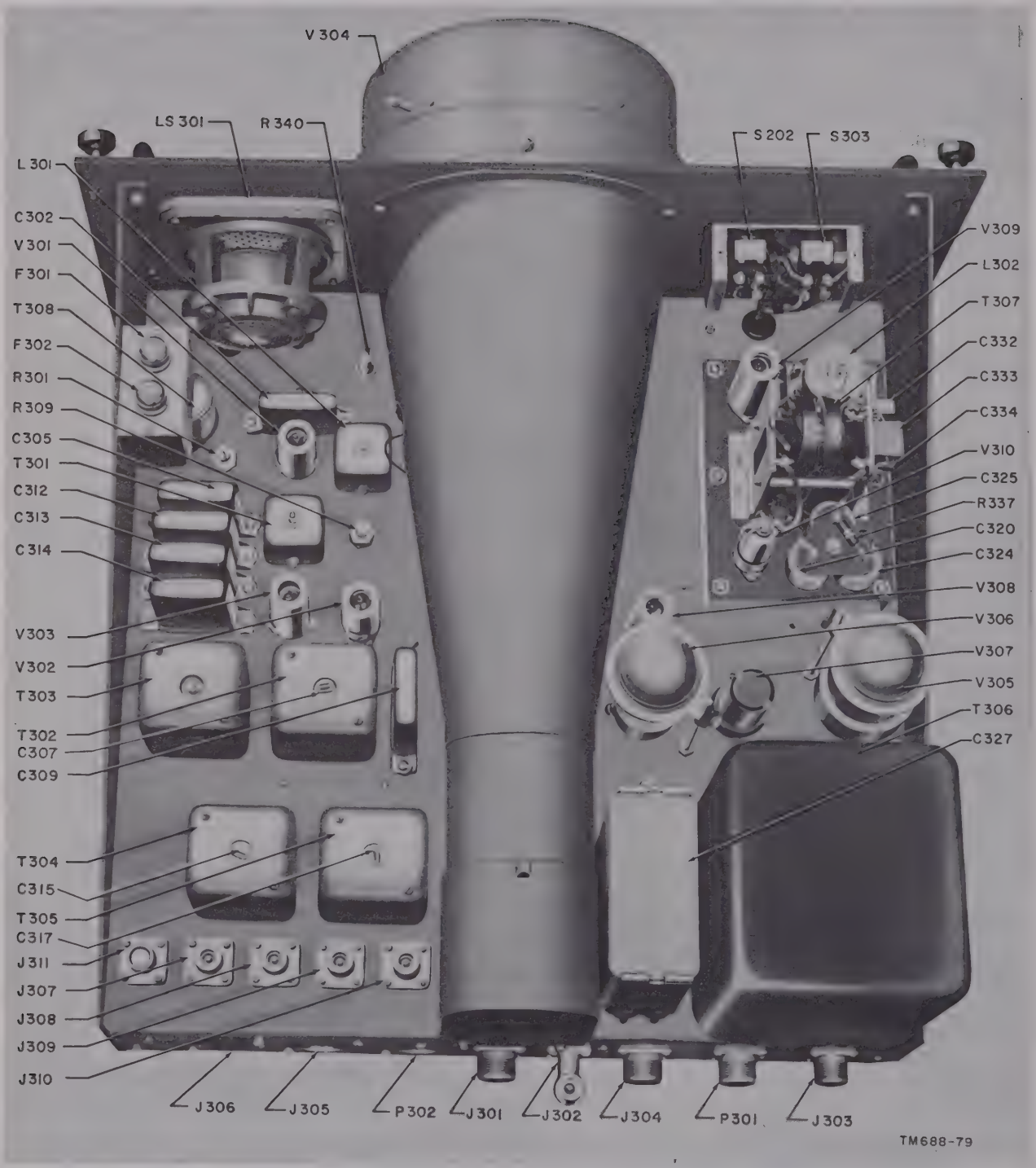

Figure 102. Azimuth Indicator IP–137/GRD, top view.

182. Dc Resistance of Transformers and Coils in Azimuth Indicator

The dc resistance of the transformer windings and the coils in Azimuth Indicator IP-137/GRD are as follows:

Transformer or coil	Terminals	Ohms
L301	A–D	12
L302	----------	23
T301	C–B	Less than 1 ohm
	A–D	12
T302	1–2	12
	3–4	15
T303	1–2	Less than 1 ohm
	3–4	Less than 1 ohm
T304	1–2	Less than 1 ohm
	3–4	21
	6–7	21
T305	1–2	Less than 1 ohm
	3–4	21
	6–7	21
T306	1–2	Less than 1 ohm
	3–4	46
	4–5	46
	6–7	Less than 1 ohm
	7–8	Less than 1 ohm
	9–10	Less than 1 ohm
	11–12	Less than 1 ohm
T307	1–2	2
	3–4	420
	Red–Red	Less than 1 ohm
T308	1–2	23
	3–4	Less than 1 ohm

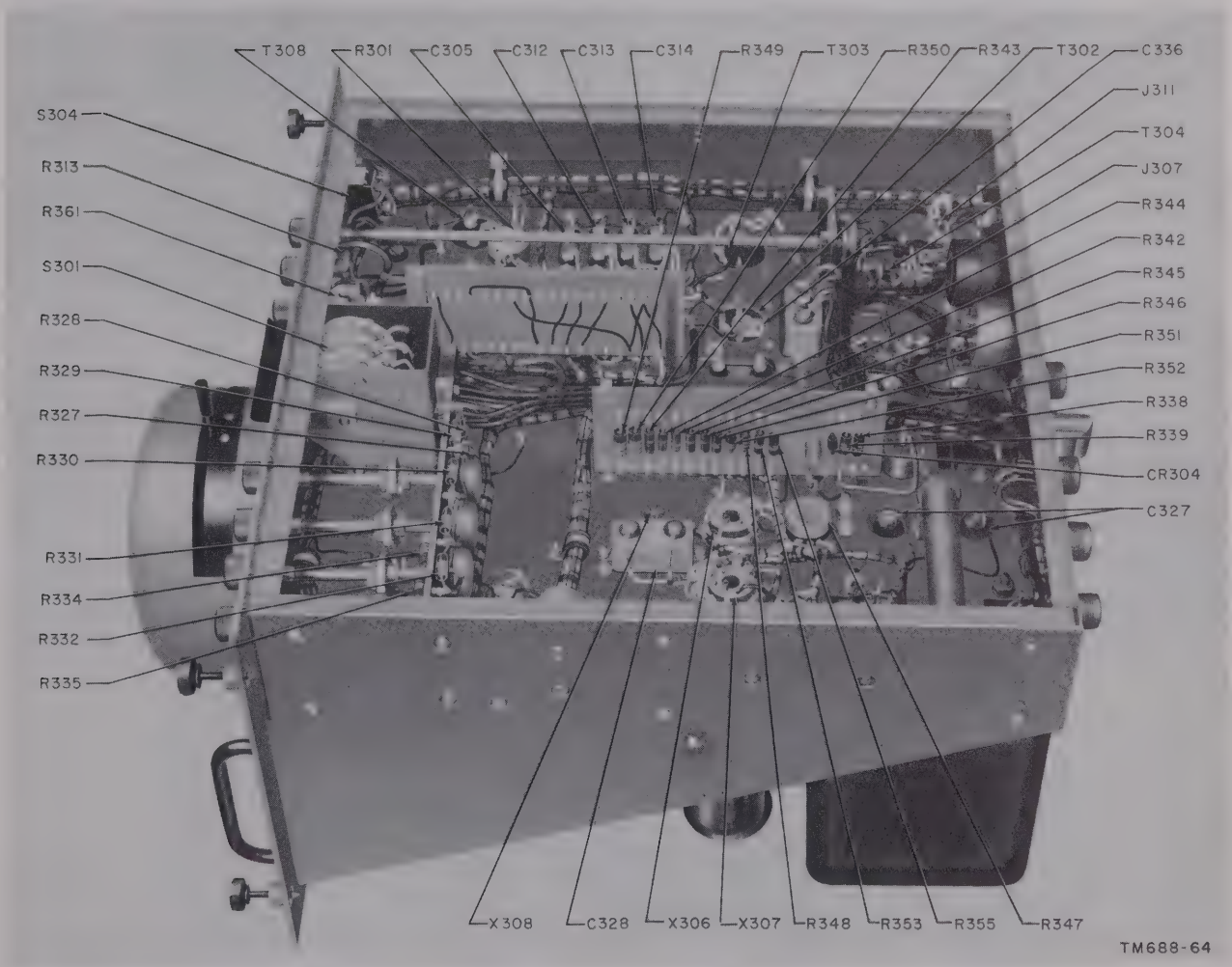

Figure 103. Azimuth Indicator IP-137/GRD, bottom view, left side.

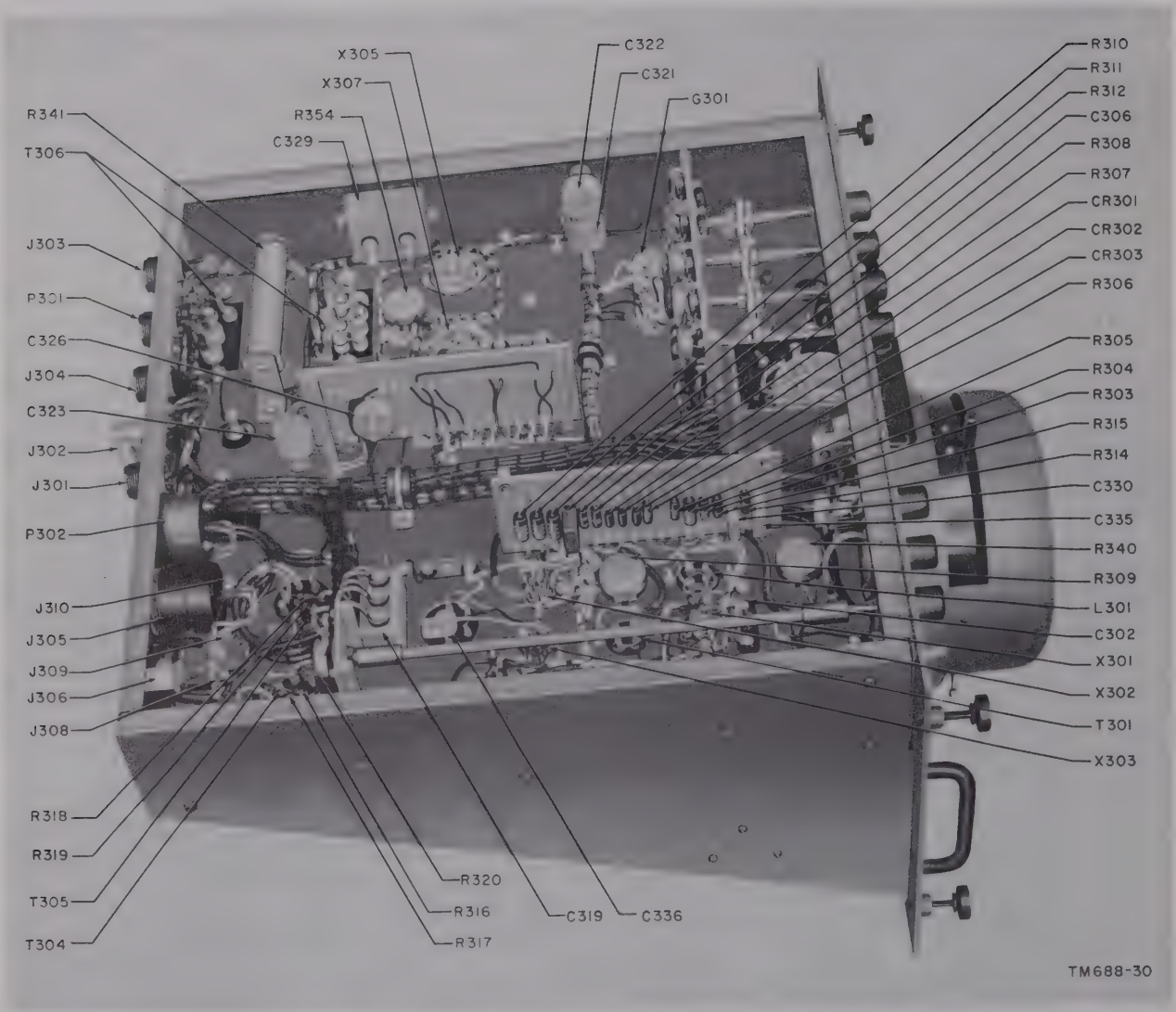

Figure 104. Azimuth Indicator IP–137/GRD, bottom view, right side.

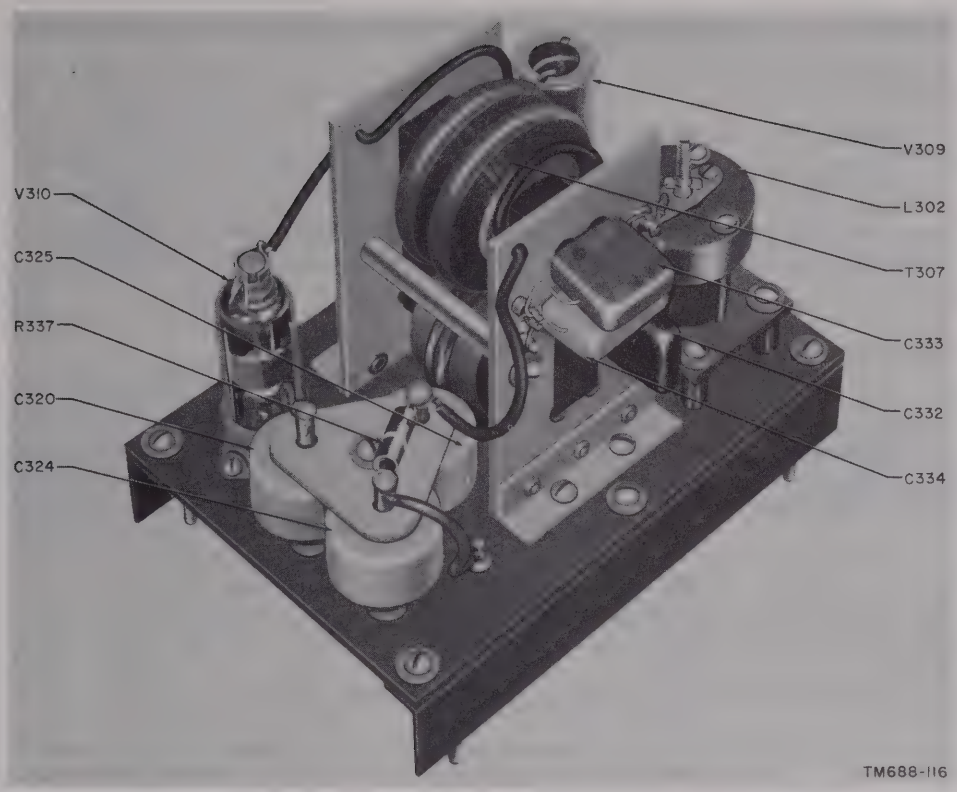

Figure 105. Azimuth Indicator Power Supply PP–988/GRD, top view.

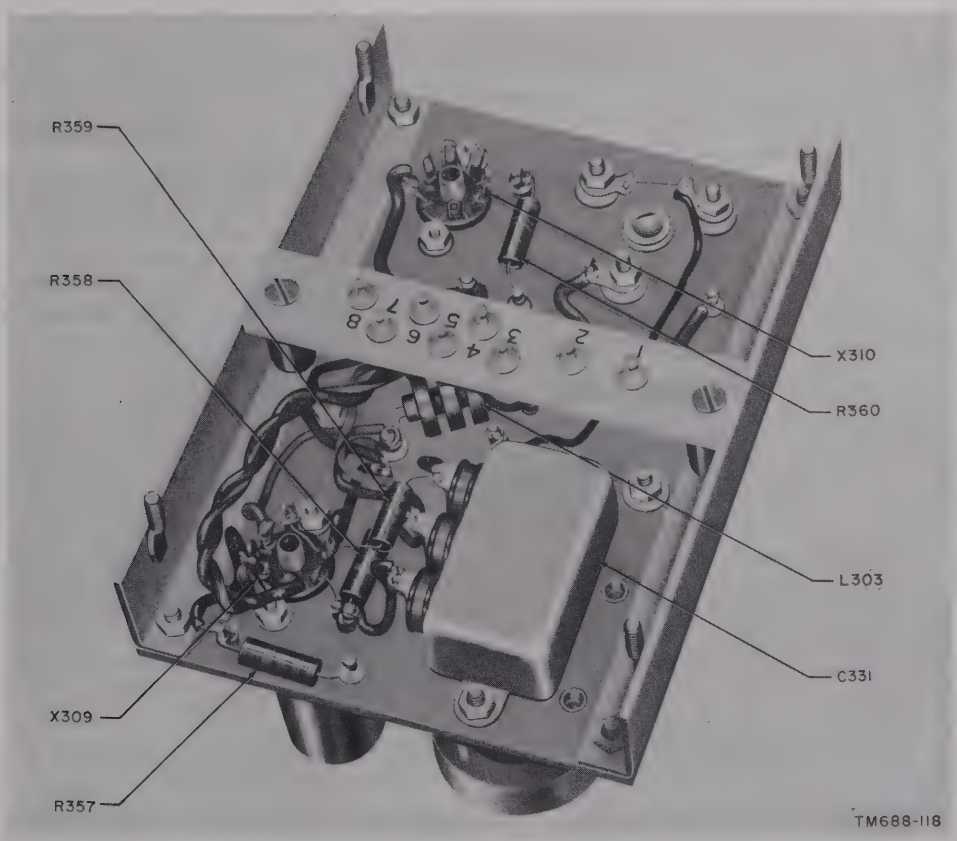

Figure 106. Azimuth Indicator Power Supply PP–988/GRD, bottom view.

Section IV. TROUBLESHOOTING IN RADIO RECEIVER R–390/URR

183. General

For detailed troubleshooting information of Radio Receiver R–390/URR, refer to TM 11–856. Paragraphs 133 and 134 of this manual contain a theory discussion at the block diagram level. Some of the troubles common to this radio receiver when used as the df receiver in Direction Finder Set AN/TRD–4A are covered in paragraph 184. A block diagram of Radio Receiver R–390/URR is shown in figure 71, the front panel is shown in figure 45 and the rear panel is shown in figure 107.

184. Troubles Common to Radio Receiver R–390/URR

Symptom	Probable trouble	Correction
1. When FUNCTION switch is in AGC position, receiver fails to operate and dial lamp does not light.	Open AC 3A fuse F101 on rear panel of radio receiver (fig. 107).	Replace F101 with a 3-ampere fuse. If it blows again; refer to TM 11–856, check primary power connections, and check power supply filament and oven circuits for shorts.
2. Dial lamp lights, but needle of CARRIER LEVEL meter does not deflect. No reception and no B+ voltage.	Open B+ ⅜A fuse (F102) on rear panel of radio receiver (fig. 107).	Replace F302 with a ⅜-ampere fuse. If it blows again, check capacitor C101. Check plate and screen-grid circuits for shorts.
3. If output is normal, but there is no audio output.	Fault is in signal circuit after fifth if amplifier stage.	Follow signal substitution procedure explained in TM 11–856.
4. No if output and no audio output from df receiver.	Trouble is in either agc circuit, or a stage before sixth if amplifier.	Refer to TM 11–856 and check bias on first rf amplifier. If bias is abnormal, check tubes in agc circuit. If bias is normal, check tubes preceding the sixth if amplifier.
5. Audio output is normal but there is no if output.	Trouble is in if cathode follower V511B	Check V511. Refer to TM 11–856 and check voltages at tube-socket pins.
6. No beat signal is heard when BFO switch is turned to ON and BFO PITCH is varied.	Trouble is in beat-frequency oscillator V508.	Check V508. Refer to TM 11–856 and check voltages at tube-socket pins. Check BFO switch.
7. No calibration signal when FUNCTION switch is on CAL position.	Trouble is in calibration oscillator channel	Check V901 and V902. Replace crystal Y901 with one that is known to be good. Refer to TM 11–856 and check voltages at tube socket pins.
8. Excessive hum from ac power supply.	Defective filter capacitor or electronic voltage regulator.	Adjust HUM BAL control. Check C101, V605, V607, V608, and V609. Refer to TM 11–856 and check voltages at tube socket pins.
9. Weak signal	Low input voltage or weak tubes	Check power input voltage. Refer to TM 11–856 and check B+ supply and gain of each stage to localize trouble.
10. Noisy receiver	Poor antenna location	Ground antenna by setting FUNCTION switch in CAL position. (Receiver must not be tuned to an even 100-kc frequency or calibration signal will interfere with test.) A considerable decrease in noise level when antenna is grounded indicates a noisy antenna.
	Shorting elements within tube	Use an insulated prod to tap each tube. If tapping a tube increases noise, try a new tube.

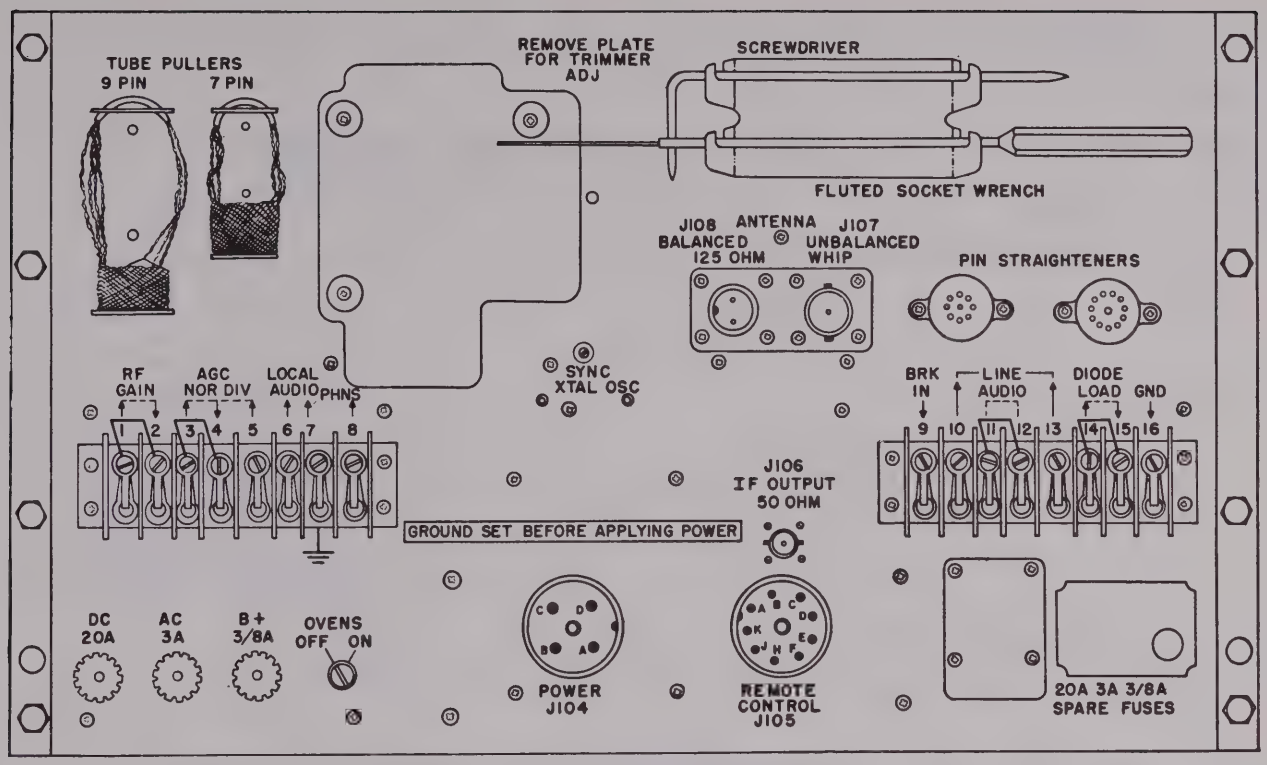

Figure 107. Radio Receiver R-390/URR, rear panel.

Section V. TROUBLESHOOTING IN RADIO FREQUENCY AMPLIFIER AM-496/TRD-4

185. Troubleshooting Data

The illustrations listed below will be helpful in rapid location of faults.

Fig. No.	Description
108	Radio Frequency Amplifier AM-496/TRD-4, voltage and resistance measurements at tube sockets.
109	Radio Frequency Amplifier AM-496/TRD-4, view of chassis on door.
110	Radio Frequency Amplifier AM-496/TRD-4, view of upper section.
111	Radio Frequency Amplifier AM-496/TRD-4, view of lower section.
112	Radio Frequency Amplifier AM-496/TRD-4, view of power supply.
133	Radio Frequency Amplifier AM-496/TRD-4, complete schematic diagram.
134	Radio Frequency Amplifier AM-496/TRD-4, wiring diagram.

186. Test Equipment Required for Troubleshooting RF Amplifier

The test equipment required for troubleshooting Radio Frequency Amplifier AM-496/TRD-4 is listed below with the technical manual associated with the test equipment.

Test equipment	Technical Manual
R. F. Signal Generator Set AN/URM-25	TM 11-5551
Electron Tube Test Set TV-7/U	TM 11-5083
Multimeter TS-352/U	TM 11-5527

187. General Precautions

When the rf amplifier is serviced, observe the following precautions carefully.

a. Be careful when servicing the rf amplifier with the power turned on. Voltages of 185 volts are exposed at pin 2 of terminal board E202 and at several other points on the chassis. Equally dangerous voltages are exposed at the terminals of power transformer T207 and switch S204.

b. To prevent damage to the rf amplifier cabling, before opening the door, remove the output cable from connector J205. Before opening the door fully, disconnect the plugs from J206 and J207 (fig. 109).

188. Operational Test of Rf Amplifier

Operate the equipment as described in the equipment performance checklist (par. 102). This checklist is important because it frequently indicates the general location of the trouble.

189. Troubleshooting Chart, Radio Frequency Amplifier AM–496/TRD–4

Symptom	Probable trouble	Correction
1. POWER switch S204 ON. No pilot lamps light.	*a.* Defective switch S204	*a.* Replace.
	b. Fuse F201 open	*b.* Replace F201 with a ⅜-ampere fuse. If it blows again, check troubles below.
	c. Short in B+ circuit	*c.* Check resistance to chassis at terminal 2 of E202. It should be approximately 32,000 ohms. If it is significantly less, check C209, C213, C215, and C219.
	d. Short in 115-volt ac circuit	*d.* Check resistance to chassis at terminals 3 and 4 of E202. It should be infinite. If it is not infinite, check relays K201 and K202 and associated wiring.
2. Pilot lamps light. No signal in any position of ANT. SELECT. switch.	*a.* Defective phase inverter V202	*a.* Replace.
	b. Defective rectifier V203	*b.* Replace.
	c. No B+ or filament voltage	*c.* Check voltages and resistances at tube socket contacts or V202 and V203.
	d. Disconnected or defective cable W205 from J205 to R.F. SWITCH.	*d.* Repair or replace.
3. Signal with ANT. SELECT. switch in SINGLE LOOP position. No signal in MONITOR position.	*a.* Defective sense amplifier V201	*a.* Replace.
	b. Defective relays K201 or K202	*b.* Replace.
	c. Defective ANT. SELECT. switch S201.	*c.* Repair or replace.
4. Signal with ANT. SELECT. switch in MONITOR position. No signal in SINGLE LOOP position.	*a.* Defective ANT. SELECT. switch S201.	*a.* Repair or replace.
	b. Defective sense switch S202	*b.* Repair or replace.
	c. Defective BAND SWITCH S203	*c.* Repair or replace.
5. Signal with ANT. SELECT. switch in either MONITOR or SINGLE LOOP position. No sensing.	Defective sense switch S202	Repair or replace.
6. Signal with ANT. SELECT. switch in SINGLE LOOP position, but figure-eight response unobtainable.	Short or open circuit in balanced circuit	Check all components and wiring from north-south slip rings to primary of coupling transformer T206. Replace defective part.

190. Dc Resistance of Transformers and Coils in Rf Amplifier

The dc resistance of the transformer winding and coils in the rf amplifier are as follows:

Transformer or coil	Terminals	Ohms
L201		475
T201	Between any two	Less than 1
T202	Between any two	Less than 1
T203	Between any two	Less than 1
T204	Between any two	Less than 1
T205	Between any two	Less than 1
T206	1–2	Less than 1
	3–4	Less than 1
T207	1–2	15
	3–4	220
	4–5	220
	6–8	Less than 1
	9–10	Less than 1

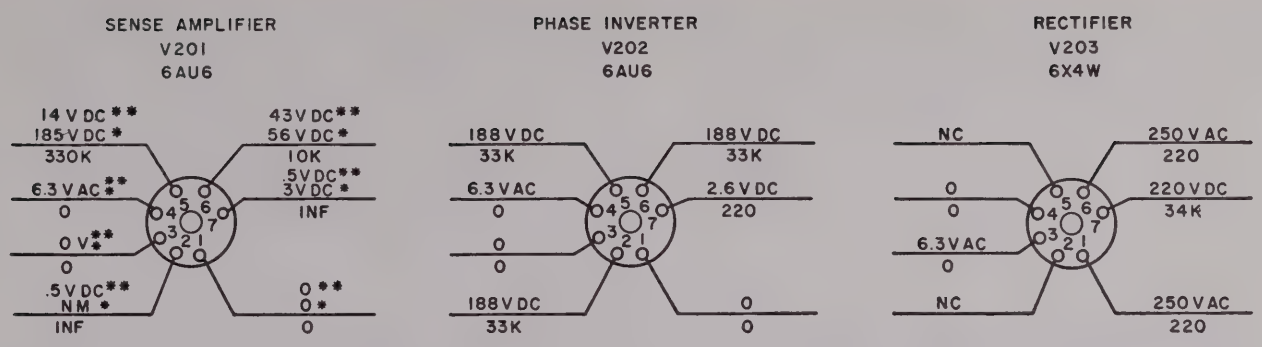

NOTES:

1. 115V AC INPUT.
2. POWER SWITCH ON.
3. ANTENNA SELECTOR- SINGLE LOOP* OR MONITOR.**
4. SENSE GAIN - MAXIMUM.
5. DC VOLTAGE AND RESISTANCES MEASURED TO GROUND WITH A 20,000 OHMS-PER-VOLT METER AC VOLTAGE MEASURED TO GROUND WITH A 1,000 OHMS-PER-VOLT METER.
6. RESISTANCE READINGS WITH ALL SWITCHES OFF.
7. RESISTANCE VALUES ARE IN OHMS.
8. INF INDICATES INFINITE.
9. NC INDICATES NO CONNECTION.
10. NM INDICATES NOT MEASURABLE.

TM688-98

Figure 108. Radio Frequency Amplifier AM-496/TRD-4, voltage and resistance measurements at tube sockets.

Section VI. TROUBLESHOOTING IN JUNCTION BOX J-95B/CRD-2 AND SWITCH BOX SA-345/U

191. Troubleshooting Data

The illustrations listed below will be helpful in the rapid location of faults.

Fig. No.	Description
113	Switch Box SA-345/U, top view, cover removed.
114	Junction Box J-95B/CRD-2, bottom view, cover removed.
128	Switch Box SA-345/U, complete schematic diagram.
129	Junction Box J-95B/CRD-2, complete schematic diagram.
130	Junction Box J-95B/CRD-2, wiring diagram.

192. Test Equipment Required for Troubleshooting Junction Box and Switch Box

The test equipment required for troubleshooting Junction Box J-95B/CRD-2 and Switch Box SA-345/U is listed below with the associated technical manual.

Test equipment	Technical Manual
Multimeter TS-352/U	TM 11-5527

193. General Precautions

Be careful not to contact the 115-volt connections when working on these equipments. Voltages greater than 115 volts are exposed when the bottom cover of the junction box is removed and 115 volts are exposed when the switch box cover is removed.

194. Troubleshooting, Switch Box SA-345/U and Junction Box J-95B/CRD-2

a. General. Refer to the equipment performance checklist (par. 101) to determine whether the trouble is in Junction Box J-95B/CRD-2 or Switch Box SA-345/U.

b. Troubleshooting Switch Box. Place the switch box on a test bench and connect a 115-volt, 60-cps, ac power source to the terminals marked GEN-1 on INPUT terminal strip E802. Set the selector switch S801 in the ON 1 position and check the output at OUTPUT terminal E801 and CONVENIENCE OUTLETS J801 and J802. If there is no output, disconnect the power to E802 and check S801 and the switch box wiring and connections.

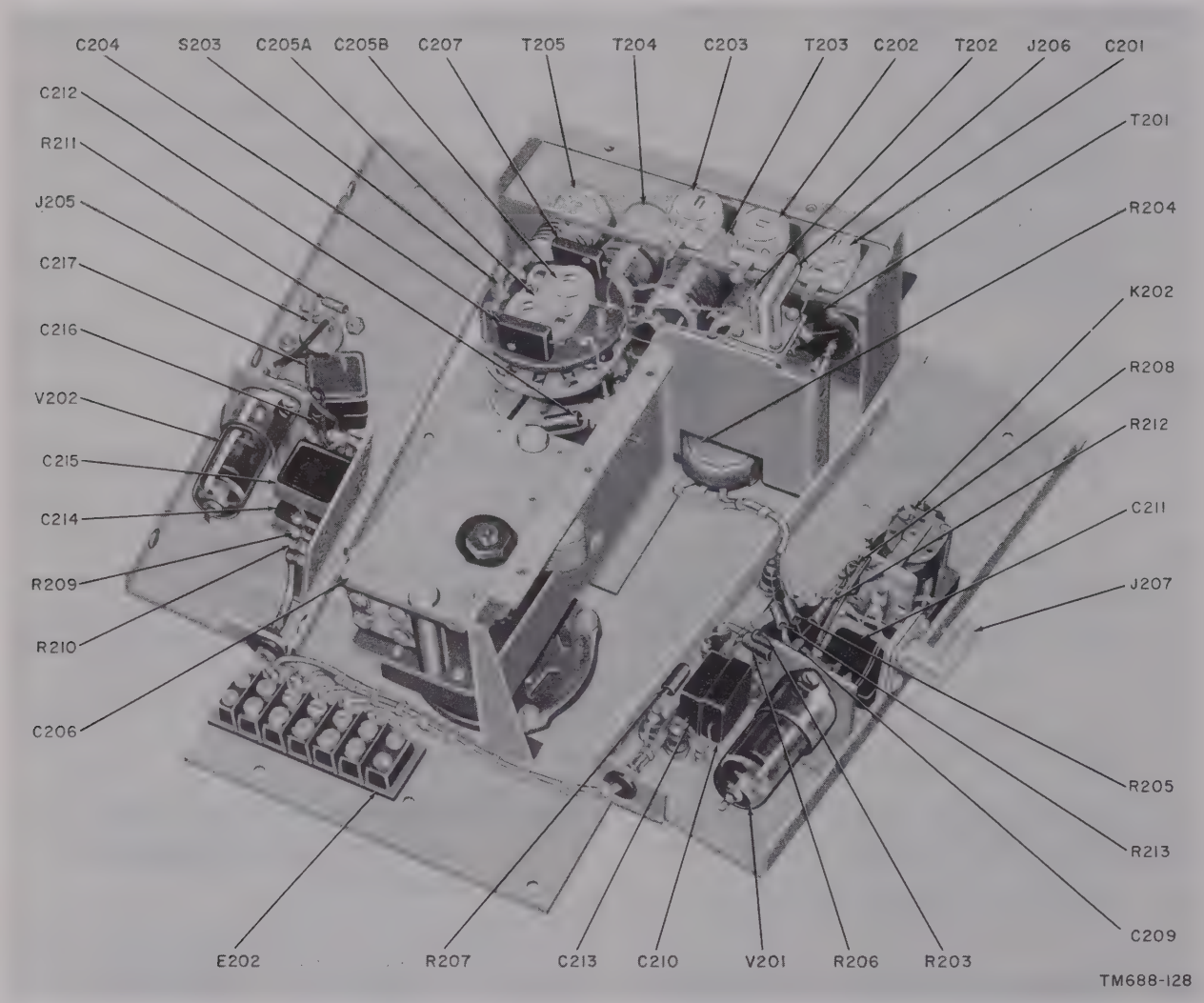

Figure 109. Radio Frequency Amplifier AM–496/TRD–4, view of chassis on door.

c. Troubleshooting Chart, Junction Box J–95B/CRD–2. Place the junction box on a test bench and connect a 115-volt, 60-cps, ac power source to P902. Proceed with the checks given in the following troubleshooting chart following the items in numerical sequence.

Symptom	Probable trouble	Correction
1. Meters M901 and M902 do not indicate voltage and frequency of power source.	*a.* Circuit breaker K902 is open	*a.* Press button marked 115 V. See note below.
	b. Defective switch contacts in either switch S901B or S902.	*b.* Replace defective switch.
	c. Defective meters, short circuit across output load.	*c.* Replace defective meters. Locate short and repair.
	d. Transformer T901 is open	*d.* Replace transformer.
2. Meters indicate normally when switch S903 is set at DUMMY position but when set at EQUIPMENT position, no voltage can be measured at receptacles J901 through J905.	Defective contacts of S903.	Replace S903.
3. Normal meter readings are obtained with a 115-volt ac power input to receptacle P902, but no voltage is indicated when a 230-volt ac power source is connected to receptacle P901 (switch S901 set at the 230 V. position).	*a.* Circuit breaker K901 is open	*a.* Press reset button marked 230 V. See note below.
	b. Defective contacts on S901A	*b.* Replace S901A.
4. Normal meter readings are obtained with a 230-volt ac power input to receptacle P901, but no voltage is indicated when a 115-volt ac power input is connected to receptacle P902 (switch S901 set at 115 V. position).	*a.* Circuit breaker K902 is open	*a.* Press reset button marked 115 V. See note below.
	b. Defective contacts on S901B	*b.* Replace switch S901B.
5. Voltmeter fluctuates	*a.* Fluctuating input from source	*a.* Test input line back to source.
	b. Defective input plugs P901, P902	*b.* Replace plugs.
	c. Defective output receptacles J901 through J905.	*c.* Replace receptacles.

Note. When circuit breaker K901 or K902 does not remain closed after it has been reset, an overload condition is indicated and could be caused by a shorted transformer T901 or by an internal short circuit within the junction box.

Section VII. TROUBLESHOOTING IN RADIO TRANSMITTER T–279/UR

195. Troubleshooting Data

Consult the following troubleshooting data:

Fig. No.	Description
115	Radio Transmitter T–279/UR, voltage and resistance measurements at tube sockets.
116	Radio Transmitter T–279/UR, left side view of chassis, case removed.
117	Radio Transmitter T–279/UR, front view of chassis, case removed.
135	Radio Transmitter T–279/UR, complete schematic diagram.
136	Radio Transmitter T–279/UR, wiring diagram.

196. Test Equipment Required for Troubleshooting Radio Transmitter

The test equipment required for troubleshooting Radio Transmitter T–279/UR is listed below. The technical manuals associated with the equipments are also listed.

Test equipment	Technical Manual
Electron Tube Test Set TV–7/U	TM 11–5083
Electronic Multimeter TS–505/U	TM 11–5511
Radio Receiver R–390/URR	TM 11–856

197. Operational Test of Radio Transmitter

Operate the equipment as described in the equipment performance checklist in paragraph 103. The checklist is important because it frequently indicates the general location of trouble.

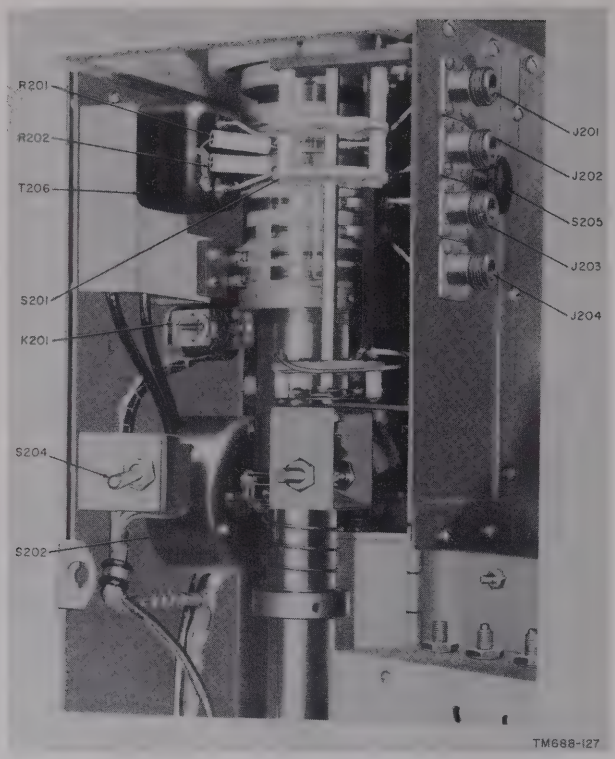

Figure 110. Radio Frequency Amplifier AM–496/TRD–4, view of upper section.

198. Troubleshooting Chart, Radio Transmitter T–279/UR

Note. A calibrated radio receiver will be required to check for the output signal.

Symptom	Probable trouble	Correction
1. Flashing indicator lamp does not light.	*a.* Dead batteries	*a.* Check batteries, and replace if below standard.
	b. Dirty lamp socket contacts or defective lamp.	*b.* Inspect contacts. Replace defective lamp.
	c. High humidity	*c.* None. Disregard if radio transmitter functions otherwise.
2. No output signal on all bands	*a.* Dead batteries	*a.* Check batteries, and replace if below standard.
	b. Defective rf oscillator V601 or rf amplifier V602.	*b.* Check tubes, replace if defective.
	c. Defective BANDSWITCH S603	*c.* Repair or replace S603.
	d. Tuning capacitor C601 or C602 shorted by foreign matter or bent plates.	*d.* Repair or replace capacitor. Realine after this operation.
	e. Defective transmitter switch S601	*e.* Repair or replace S601.
3. No output signal on one band	*a.* Defective BANDSWITCH contact	*a.* Repair or replace switch.
	b. Defective coil	*b.* Test coil of dead band. Repair or replace and realine.
4. No mcw signal	*a.* Defective af oscillator V603	*a.* Replace tube.
	b. Defective CW-MCW switch S602	*b.* Repair or replace S602.
5. Intermittent operation	*a.* Poor connections	*a.* Inspect and repair.
	b. Noisy tube	*b.* Check tubes, replace if necessary.
	c. Defective contacts in BANDSWITCH S603.	*c.* Clean switch contacts. Repair or replace S603.

Symptom	Probable trouble	Correction
6. Weak output signal or OUTPUT control inoperative.	*a.* Weak batteries	*a.* Check batteries and replace if below standard.
	b. Defective rf amplifier V602	*b.* Replace V602.
	c. Defective potentiometer R609	*c.* Check resistance at maximum and minimum positions.
7. Frequency calibration incorrect or varies.	*a.* Dirty contacts on BANDSWITCH S603.	*a.* Clean BANDSWITCH contacts.
	b. Dial drive mechanism or shaft coupling setscrews loose.	*b.* Tighten setscrews.
	c. Incorrect adjustment or alinement of coils.	*c.* Realine coils (pars. 218 and 219).

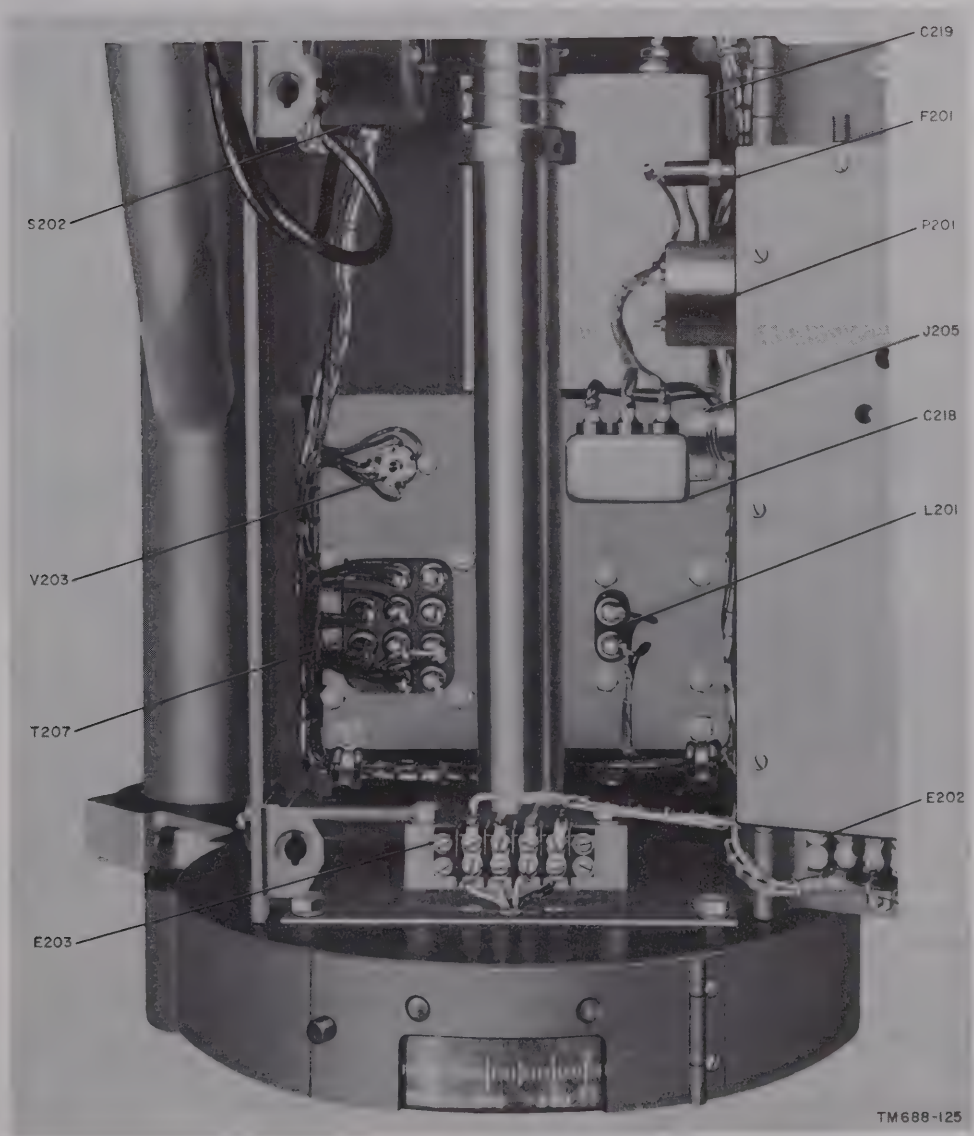

Figure 111. Radio Frequency Amplifier AM-496/TRD-4, view of lower section.

199. Dc Resistance of Coils in Radio Transmitter

The dc resistance of the transformer windings and the coils in Radio Transmitter T–279/UR are as follows:

Transformer or coil	Terminals	Ohms
L601	Across ends of coil	5
L602	Across ends of coil	2
L603	Across ends of coil	Less than 1 ohm
L604	Across ends of coil	Less than 1 ohm
L605	Across ends of coil	Less than 1 ohm
L606	Across ends of coil	Less than 1 ohm
L607	Across ends of coil	8
L608	Across ends of coil	3
L609	Across ends of coil	Less than 1 ohm
L610	Across ends of coil	Less than 1 ohm
L611	Across ends of coil	Less than 1 ohm
L612	Across ends of coil	Less than 1 ohm
L613	Across ends of coil	25

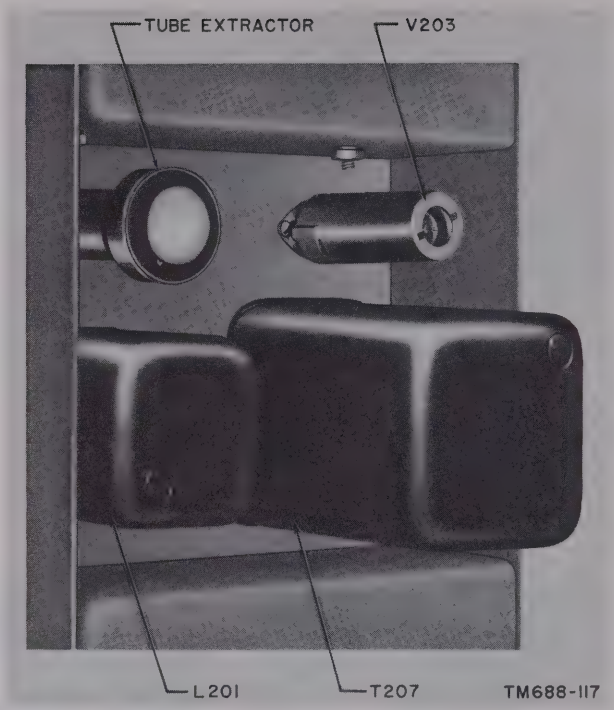

Figure 112. Radio Frequency Amplifier AM–496/TRD–4, view of power supply.

Section VIII. REPAIRS

200. Repair of Goniometer Drive

Repairs that require special procedures are the replacement of worn-out belts and drive disks. The replacement procedures are given in paragraph 201.

201. Replacement of Parts in Goniometer Drive

a. Belt. With normal use, it is possible that the belt may require replacement. To replace the belt, proceed as follows:

(1) Loosen the captive screws at both ends of the goniometer drive front panel and pull the unit as far forward as possible.

(2) Remove the cables from the signal goniometer, back off the knurled nuts that hold the signal goniometer to the housing, and remove the goniometer.

(3) Remove the belt, first from the motor pulley and then from the drive pulley.

(4) Install the new belt, first over the drive pulley and then over the motor pulley.

(5) The belt tensions should be such that grasping the belt at a point midway between the pulleys and moving it up and down produces about 1-inch deflection. If a change is necessary, the four drive motor mounting bolts underneath the chassis must be loosened, the adjustment screw on the rear of the chassis adjusted to slide the motor forward or backward as desired, and then the drive motor mounting bolts tightened.

(6) Replace the signal goniometer and cables.

Note.—To insure that the plunger on the coupling mates with the slot in the drive disk, the end of the goniometer shaft is made accessible through a countersunk hole in the body of the goniometer. Press a pencil in the countersunk hole and rotate the bearing indicator scale until a click is heard, indicating that the plunger has fallen into the slot.

b. Drive Disk.

(1) Remove both goniometers.

(2) Insert a screwdriver into the center of the drive pulley and unscrew the retaining screws that hold the two drive disks together.

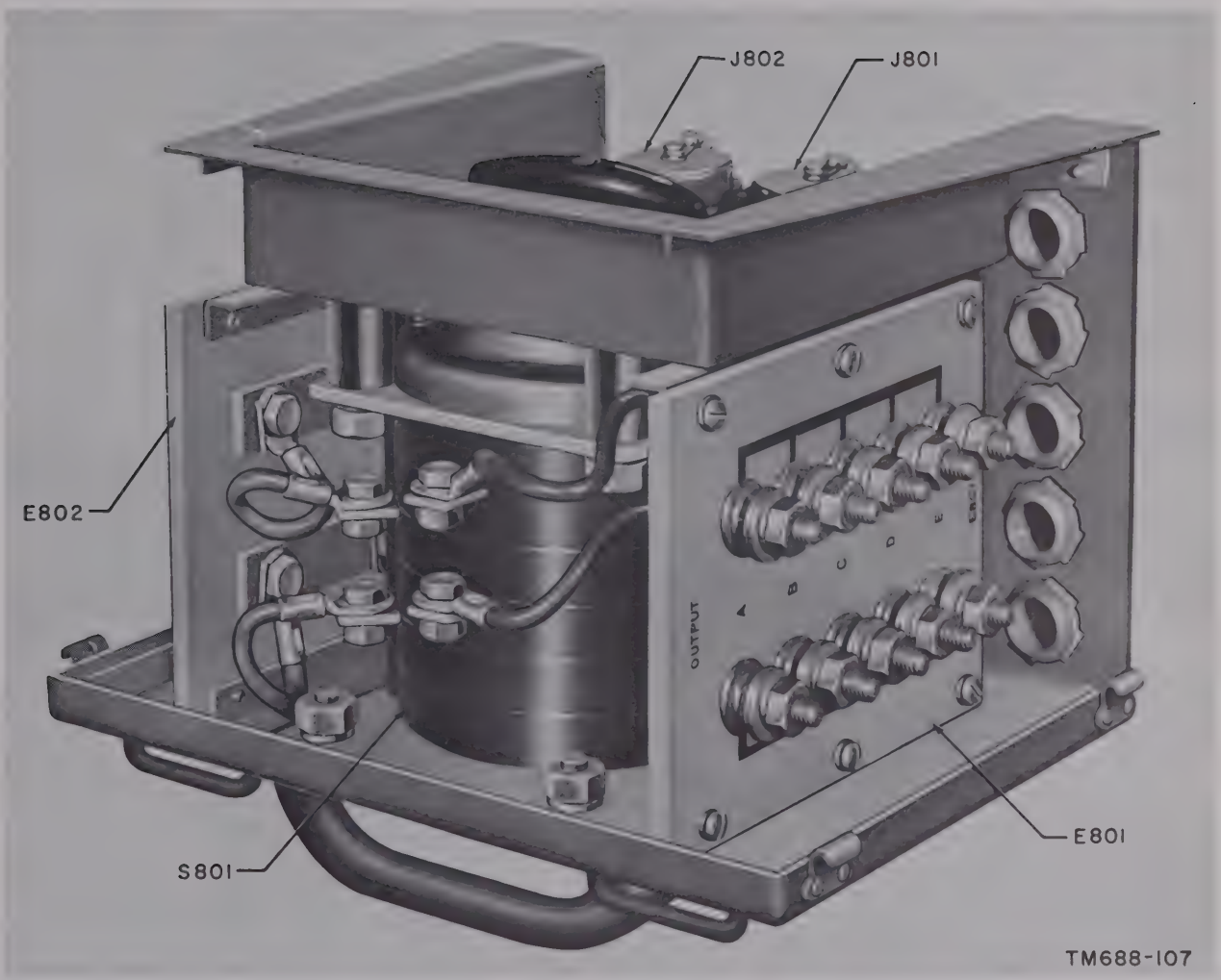

Figure 113. Switch Box SA-345/U, top view, cover removed.

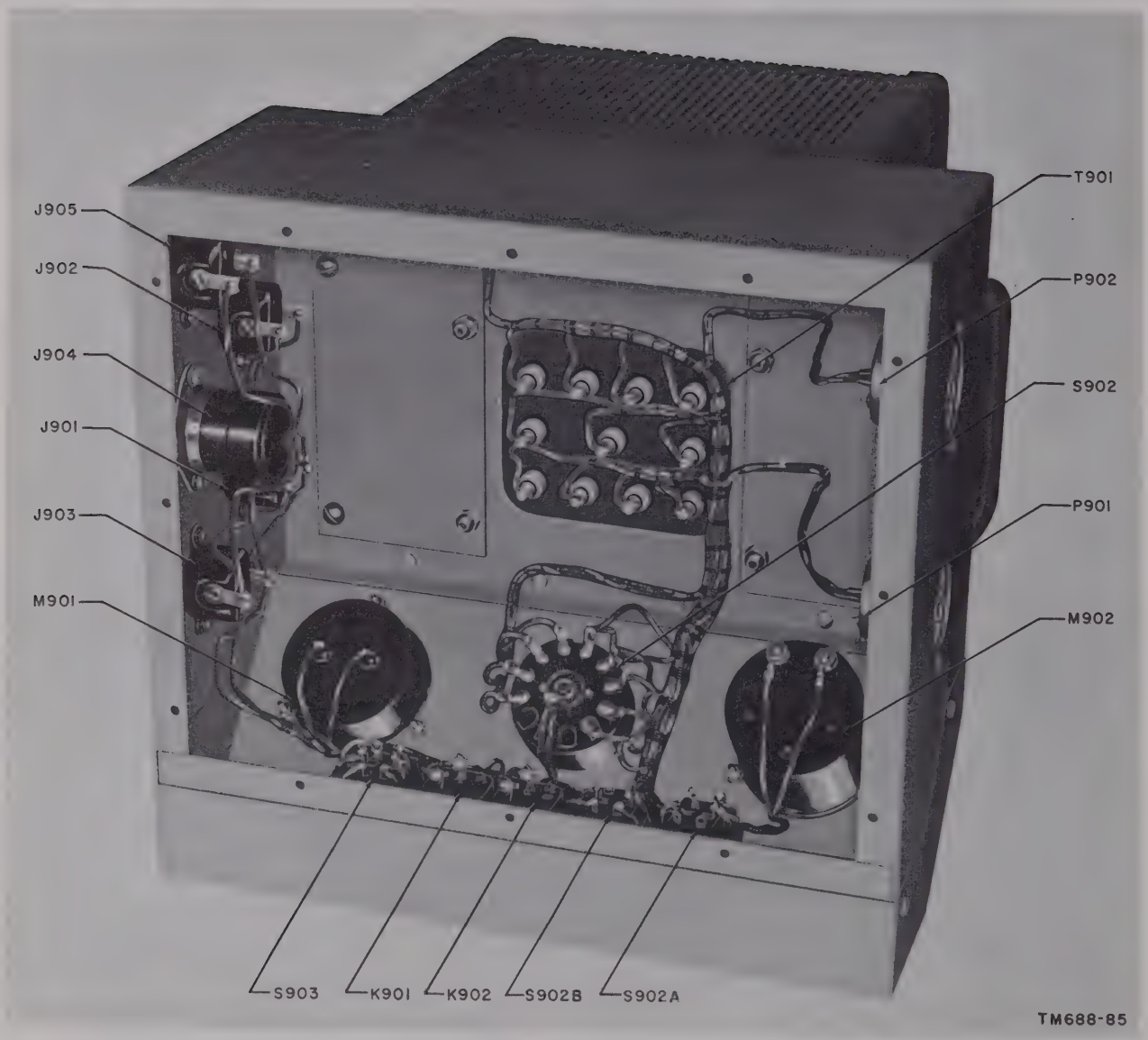

Figure 114. Junction Box J-95B/CRD-2, bottom view, cover removed.

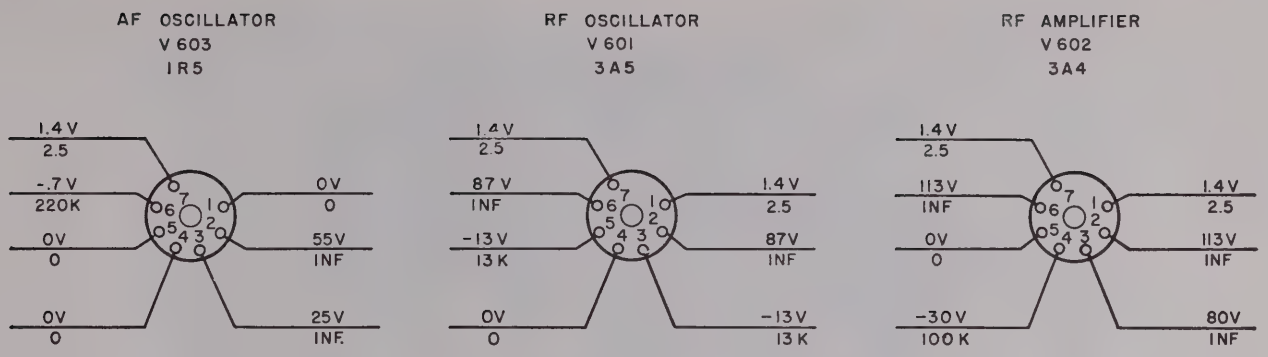

NOTES

1. ANTENNA IS FULLY EXTENDED.
2. BAND SWITCH IS ON BAND 3.
3. TUNING DIAL IS SET TO 3MC.
4. MCW-CW SWITCH IS ON MCW.
5. OUTPUT CONTROL IS TURNED FULL CLOCKWISE FOR MAXIMUM OUTPUT.
6. TRANSMITTER SWITCH IS TURNED ON.
7. BATTERY PLUGS ARE DISCONNECTED FOR RESISTANCE MEASUREMENTS ONLY.
8. BOTTOM VIEWS OF SOCKETS ARE SHOWN.
9. VOLTAGES AND RESISTANCES MEASURED TO GROUND WITH A 20,000 OHMS-PER-VOLT METER. USE HIGHER METER RANGES TO PREVENT CIRCUIT LOADING.
10. RESISTANCES ARE IN OHMS, K INDICATES 1,000.
11. NM INDICATES NOT MEASURABLE.
12. NC INDICATES NO CONNECTION.
13. INF INDICATES INFINITE.

TM688-3

Figure 115. Radio Transmitter T–279/UR, voltage and resistance measurements at tube sockets.

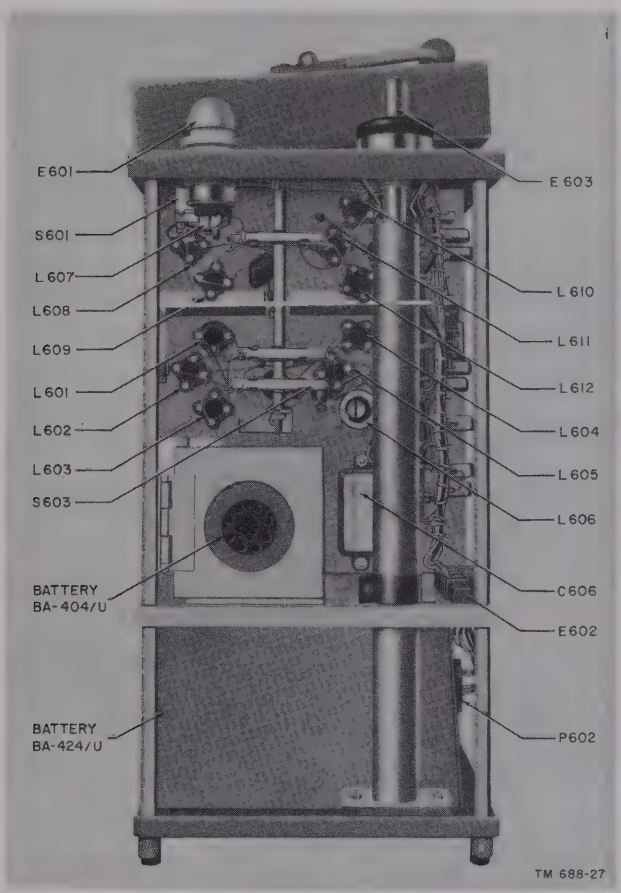

Figure 116. Radio Transmitter T–279/UR, left side view of chassis, case removed.

(3) Remove the two drive disks. Mark the disks right and left to avoid improper installation.

(4) To install the replacement disks, reverse the removal procedure facing the slotted face outward, locating the right and left disks on the proper sides.

Note.—The center line of the slot at its outer end must be lined up with 180° on the white scale.

202. Repair of Electrical Goniometers GO–5/GRD and GO–6/GRD

(figs. 100 and 118)

Repairs that require special procedures are the burnishing of relay contacts and the replacement of bearings in the goniometers. Procedures for burnishing relay contacts are given in paragraph 203 and for replacement of the bearings in paragraph 204.

203. Burnishing Relay Contacts

a. Sense Relay. Relays K401 and K501 may require occasional attention to assure satisfactory operation. Improper operation is indicated by a ragged or intermittent sense pattern on the azimuth indicator.

b. Relay Repair. To repair the relay, proceed as follows:

(1) Remove the left cover plate from the goniometer (fig. 100).

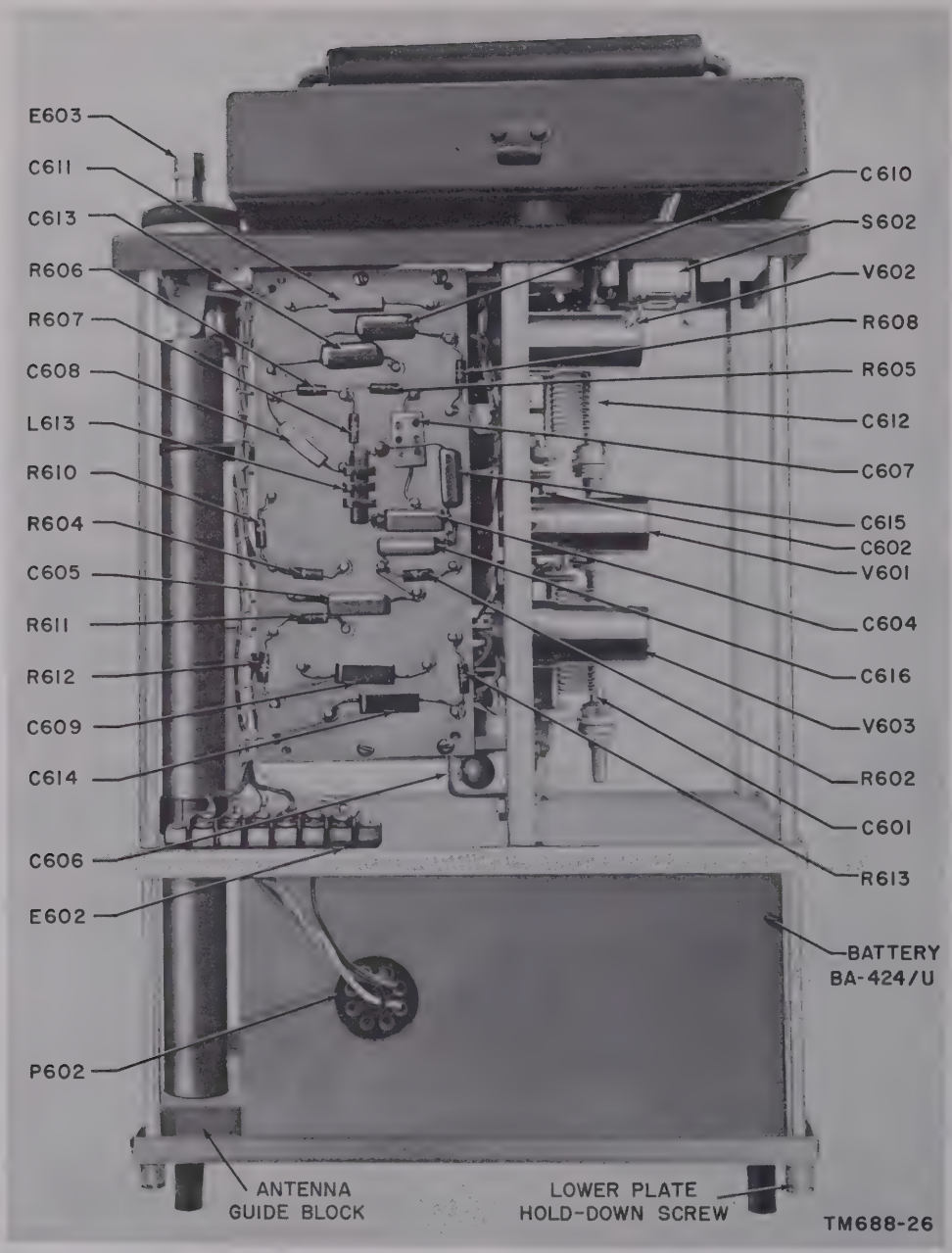

Figure 117. Radio Transmitter T-279/UR, front view of chassis, case removed.

(2) Burnish the relay contacts with a burnishing tool. The contacts may be cleaned with carbon tetrachloride.

Caution: Never use emery cloth, sandpaper, or a file on the contacts. Repeated contact of carbon tetrachloride with the skin or prolonged breathing of the fumes is dangerous. Make sure adequate ventilation is provided.

(3) Check operation and clean the contacts until a steady, hash-free pattern is obtained.

(4) Replace the side cover plate.

204. Replacement of Bearings in Goniometers

(fig. 118)

a. Rotor Removal.

(1) Loosen the four captive screws (fig. 14) on the front panel of the gonio-

meter drive and pull the goniometer drive as far forward as possible.

(2) Remove the cables connected to the goniometer, back off the knurled nuts that hold the goniometer to the goniometer drive housing and remove the goniometer from the goniometer drive.

(3) With a pencil, mark a line on the front cover plate and on the goniometer housing. Remove the three flathead screws that hold the front cover plate to the goniometer housing.

(4) Grasp the coupler and pull the rotor of the goniometer from the goniometer housing.

b. Rear Bearing Replacement. Pull the rear bearing off the shaft and press the new bearing on the shaft. Reverse the removal procedure; use the line (*a*(3) above) as a guide to replace the front cover plate in the same position to retain the balance.

Caution: Do not pry the bearings off the shaft; if the bearing cannot be pulled off the shaft, use a bearing puller.

c. Front Bearing Replacement.

(1) Insert a punch in the small diameter hole in the coupler and remove the tapered locking pin.

Caution: The small diameter end of the tapered pin is adjacent to the Allen set screw. The punch must be inserted in this end to drive the tapered pin through the shaft and coupler.

(2) Use a No. 6 Allen wrench to loosen the Allen set screw.

(3) Pull the coupler off the shaft.

(4) Pull the front cover plate and front bearing off the shaft.

(5) Press the new bearing in the front cover plate and reverse the removal procedure. Use the line (*a*(3) above) as a guide to replace the front cover plate in the same position to retain the balance.

205. Repair of Azimuth Indicator

Repairs which require special procedures are the replacement of the sense switch and cathode-ray tube (par. 206). The alidade friction adjustment and alinement is also described (par. 207).

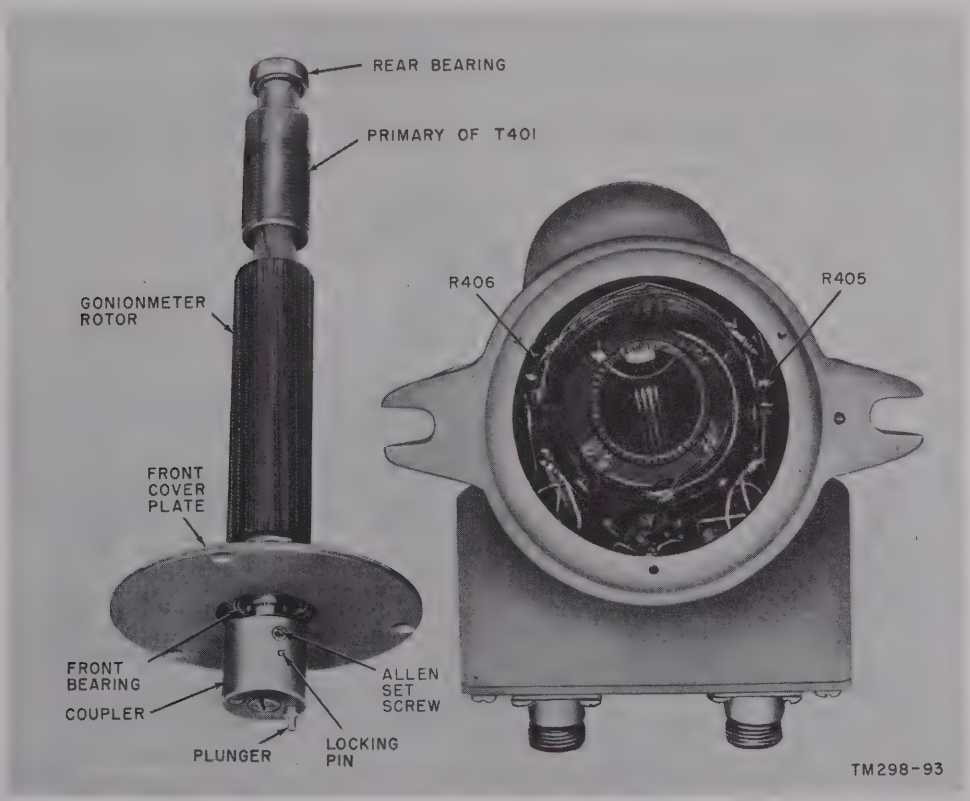

Figure 118. Electrical Goniometer GO-5/GRD, rotor removed.

206. Replacement of Parts in Azimuth Indicator

a. All parts in the azimuth indicator are easily replaced if found to be faulty.

b. If the sense switch requires replacement, proceed as follows:

(1) Remove the azimuth indicator from the electrical equipment cabinet and remove the bottom plate from the azimuth indicator.

(2) Loosen the two setscrews holding the sense switch handle and pull the handle out from the front.

(3) Remove four screws from the switch mounting flanges.

(4) Remove the switch as far as the harness will permit and unsolder the leads.

Note.—Mark the wires connected to the switch carefully with tags or other devices to avoid misconnection when the switch is installed.

(5) Reverse the removal procedure to install the replacement.

c. To replace the cathode-ray tube, proceed as follows:

(1) Remove the alidade assembly by taking out three screws around the circumference. Pull or pry the housing off. Be careful to avoid marring the finish. It is not necessary to remove the lamp assembly.

(2) Disconnect the accelerating anode lead from the side of the tube.

(3) At the back of the tube, remove the cover by taking out two screws from the chassis.

(4) Remove the connector attached to the tube base.

(5) Wet the four grommets at the front of the tube with soapy water or the tube may be broken during removal.

(6) Grasp the tube base with both hands and push the tube key at the socket with the thumbs until the tube is loose.

(7) Remove tube through the front panel.

(8) To replace the tube, reverse the above procedure and check alinement (par. 217*f*).

207. Alidade Friction Adjustment and Alinement
(fig. 119)

The alidade rotating control may be adjusted and alined as follows:

a. Remove the hood by taking out four screws and the lock knob.

b. Remove the bearing retaining ring by taking out six flat-head screws.

c. Loosen the eight lock screws.

d. Tighten or loosen the eight adjusting screws until excess looseness or binding is eliminated.

e. Before locking the adjusting screws, check to see that the cross hairs have not been shifted to one side. This may be done by checking

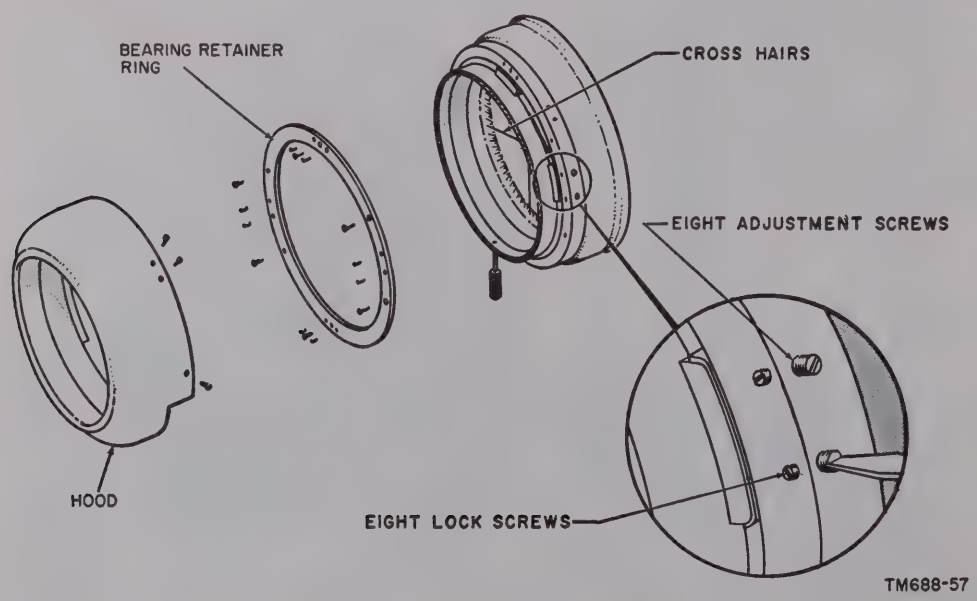

Figure 119. Adjustment of alidade.

direct and reciprocal readings. Readings should be exactly 180° apart.

f. If the cross hairs have shifted to one side, do not attempt to line up all four cardinal points at one time. Line up a cross hair with the 0° and the 180° marks first. If there is 1° error, split the difference; ½° at the 0° mark and ½° at the 180° mark. Shift the cross hair to one side until there is no error. Repeat this operation for the 90° and 270° cross hairs, shifting the cross hair up or down as required.

g. Lock the eight lockscrews and replace the retainer ring and hood.

208. Correcting Errors Caused by Static Accumulations

When it is evident that rotating the alidade causes a shift in the pattern, spray the inside surface of the alidade lens and the cathode-ray tube face with antistatic wax; use the spray bottle supplied with the equipment. Allow the liquid to dry and then polish lightly with a soft, dry, clean cloth. This will eliminate the static charge which causes errors in the readings.

209. Repair of Rf Amplifier

Repairs which require special procedures are the replacement of the antenna switch and sense switches, and the disassembly of the chassis, the antenna shaft, bearings, and slip rings.

210. Replacement of Parts in Rf Amplifier

a. Antenna Selector Switch S201 (A, fig. 120).

(1) Disconnect the four rf cables.

(2) Remove the ANT. SELECT. knob and take off the front panel.

(3) Unsolder the two leads from the antenna selector switch to terminal board E201, the two leads connected to pins 1 and 2 of coupling transformer T206 and the ground connection of R201 and R202.

Note.—Mark the wires carefully with tags or other devices to avoid misconnection when the switch is installed.

(4) Remove the selector switch panel by taking out the screws and pulling off the panel with the switch and connectors attached.

(5) Remove the two screws from the bakelite top mounting plate of the switch, unscrew the two bakelite posts and disassemble the switch.

(6) To install, reverse the removal procedure.

b. Sense Switch (B, fig. 120).

(1) Take off the ANT. SELECT. knob and remove the front panel.

(2) Unsolder the four connections from the antenna selector switch to the coupling transformer. Mark the leads to avoid misconnection later.

(3) Remove six screws from the mounting plate assembly and take out the plate with the coupling transformer, the slip ring contacts, and the sense switch attached.

(4) Remove the three mounting screws from the sense switch shield and take off the shield and the switch.

c. Disassembly of Chassis on Door for Removal and Replacement of All Chassis Parts (C, fig. 120).

(1) Use No. 6 Allen wrench to loosen the setscrews in the three knobs on the front panel of the door and remove the knobs.

(2) Take out the four screws that hold the dial assembly and remove the dial assembly.

(3) Take out four screws that hold the chassis to the door and remove the chassis.

(4) Take out the 11 screws that hold the rear cover plate on the chassis and remove the cover.

(5) Remove the screws and lay the sides down along each side of the chassis. This will allow access for the removal and replacement of all parts.

(6) To assemble, reverse the removal procedure. Set the two upper knobs in the extreme counterclockwise position when the shafts are in the extreme counterclockwise position.

d. Disassembly of Loop Antenna Shaft Bearings and Slip Rings (fig. 137). If the bearings or slip rings must be replaced, use the following procedure:

(1) Remove the screws from around the main upper housing on top of the shelter roof and remove the metal rings and rubber gasket.

(2) Disconnect all cables to Radio Frequency Amplifier AM–496/TRD–4.
(3) Back down the lower collars (13, fig. 137).
(4) Remove the two clamp caps at the main upper housing (12) and one at the bottom bracket (54), and remove the entire rf amplifier from the support posts (15).
(5) Remove the upper panel subassembly (36) by taking out six screws.
(6) Remove the selector switch assembly (28). Refer to *a* above.
(7) If the contact brush assembly needs replacement, unsolder the connections and remove four screws to take off the assembly.
(8) Remove the two screws that hold the other brush assembly (24) and push the assembly back into the case to clear the shaft. Unsolder the leads if the brush assembly does not need replacement.
(9) Remove the tapered lock screws in the bottom of the upper shaft assembly (8).
(10) Remove nine screws from the top of the case assembly (27) and lift out the main upper housing (12) and upper shaft assembly (8).
(11) Unscrew the slip ring retainer (25) and remove the silver contact rings (21), one at a time; unsolder the leads. Be careful not to damage the insulation on the wires.
(12) Unscrew and remove the upper bearing retainers (18).
(13) Pull out the upper shaft and shield assembly (8).
(14) Remove the bearings (11) and (17) if replacement is necessary.

211. Repair of Radio Transmitter T–279/UR

a. Most of the parts in Radio Transmitter T–279/UR are readily accessible and are easily replaced if found to be faulty. If BANDSWITCH S603 requires replacement, carefully mark the wires connected to the switch with tags or other devices to avoid misconnection when the new switch is installed. Follow this practice whenever replacement requires the disconnection of numerous wires.

b. To replace any one of the 12 rf coils, first unsolder the leads from the top of the coil; then unscrew the nut that holds the coil to the vertical chassis, and lift out the coil.

212. Cable Replacement

All Radio Frequency Cables RG–13A/U supplied with Direction Finder Set AN/TRD–4A bearing the same cable nomenclature are electrically matched in pairs. These are the 170-foot cables and the 9-foot cables which connect to the Adcock and crossed-loop antennas, respectively. Cables obtained from the depot as replacements for the above applications will be supplied in pairs and must be used only in pairs. For example: when the cable connected to the north antenna becomes defective and all the spares furnished with Direction Finder Set AN/TRD–4A are depleted, remove both the north and the south antenna cables and replace them with a matched pair obtained from the depot.

213. Refinishing

Badly marred panels which show evidence of wear should be refinished before being returned to use by field maintenance personnel. Use gray enamel, Federal Specification TT–C–595, shade 2610. Refer to paragraph 95, and TM 9–2851.

Section IX. ALINEMENT PROCEDURES

214. General

a. Goniometers. Alinement of the goniometers is accomplished when the spring loaded plungers on the couplings mate with the slots in the drive disks (par. 45*c*(5)).

b. Radio Receiver R–390/URR. Directions for aligning Radio Receiver R–390/URR are contained in TM 11–856.

c. Azimuth Indicator IP–137/GRD. The azimuth indicator is alined properly at the factory and normally will not require realinement. If faulty operation of the direction finder is definitely traced to misalignment of the azimuth indicator, the realignment procedures given in paragraphs 216 and 217 are recommended.

Caution: High voltages are exposed during alinement of the azimuth indicator.

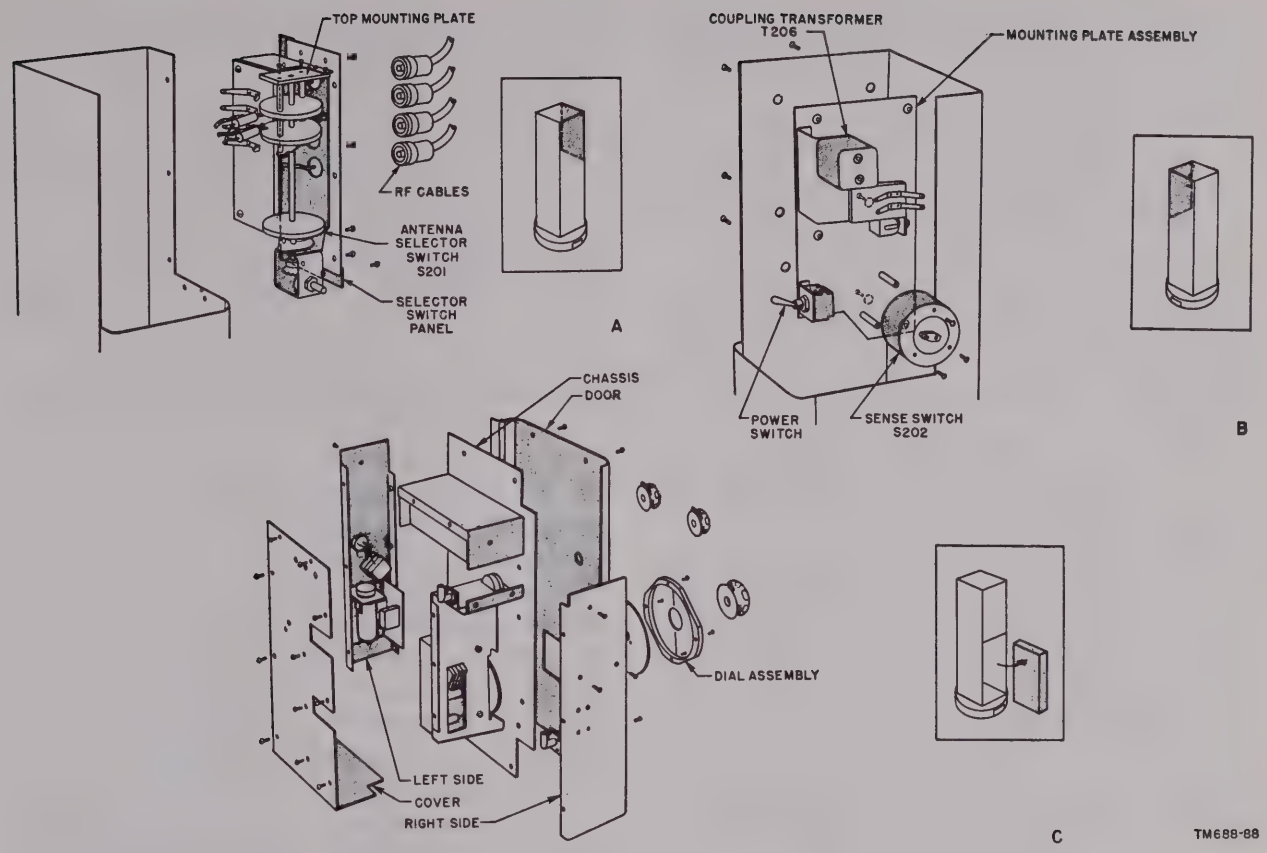

Figure 120. Radio Frequency Amplifier AM–496/TRD–4, exploded view of switches and chassis.

d. Radio Frequency Amplifier AM–496/TRD–4. Alinement of the rf amplifier is described in paragraph 218.

e. Radio Transmitter T–279/UR. Alinement of radio transmitter is described in paragraphs 219 through 221.

215. Tools and Test Equipment Required for Alinement of Azimuth Indicator, Rf Amplifier, and Radio Transmitter

a. Test Equipment.

Equipment	Technical Manual
Multimeter TS–352/U	TM 11–5527
Electronic Multimeter TS–505/U	TM 11–5511
Oscilloscope OS–8/U	TM 11–1214
Frequency Meter Set SCR–211(*)	TM 11–300
R. F. Signal Generator Set AN/URM–25	TM 11–5551
Radio Receiver R–390/URR[a]	TM 11–856

[a] Radio Receiver R–390/URR is part of Direction Finder Set AN/TRD–4A.

b. Tools.

(1) An alinement tool mounted with clips on top of the high-voltage power supply shield is supplied for making the azimuth indicator adjustments.

(2) An alinement tool (9, fig. 26) is used to adjust the coils and trimmer capacitors.

216. Bench Alinement of Azimuth Indicator

a. Test Equipment. All of the test equipment listed in paragraph 215*a* is required to align the azimuth indicator.

b. Preparation.

(1) Loosen the four captive screws on the front panel of the azimuth indicator.

(2) Grasp the handles on the front panel and pull the azimuth indicator far enough out of the electrical equipment cabinet to disconnect the cables connected to the rear of the azimuth indicator chassis.

(3) Disconnect the cables connected to the rear of the azimuth indicator chassis and remove the azimuth indicator from the electrical equipment cabinet.

(4) Place the azimuth indicator top side

down on a work bench and remove the bottom shield. The azimuth indicator with the bottom shield removed is shown in figure 104.

(5) Connect a 115-volt, 50- to 60-cps, ac power source to P302 on the rear of the azimuth indicator chassis.

(6) Perform the preliminary starting procedure in paragraph 65.

c. Positive 275-volt Adjustment. Follow the instructions contained in TM 11–5527, Multimeter TS–352/U, and adjust the positive 275-volt output of the regulated power supply as follows:

(1) Set the FUNCTION switch on the multimeter in the 20,000Ω/V DC DIRECT position.

(2) Using the 500-volt range, connect the positive lead of the multimeter to the ungrounded side of C313 (fig. 103) and the negative lead to the chassis of the azimuth indicator.

(3) Set the MAIN POWER, INDICATOR and GONIO DRIVE switches in the ON positions.

(4) Adjust potentiometer R354 (adjacent to rectifier V305, fig. 104) until the multimeter indicates 275 volts.

(5) Set the MAIN POWER switch in the OFF position and disconnect the positive lead of the multimeter from C313.

d. Control Modulator Gain Adjustment.

(1) Use the multimeter 50-volt range and connect the positive lead of the multimeter to the arm of control modulator gain control R309 (fig. 104).

(2) Set the MAIN POWER switch in the ON position and adjust R309 until the multimeter indicates 30 volts.

(3) Set the MAIN POWER switch in the OFF position and disconnect the multimeter leads.

e. Hum Balance Adjustment.

(1) Use Oscilloscope OS–8/U and connect one end of a test lead to one of the GND terminals on the front panel of the oscilloscope and the other end of the test lead to the chassis of the azimuth indicator.

(2) Connect the coaxial test cable to the AC Y INPUT jack on the front panel of the oscilloscope and clip the alligator clip on the coaxial test cable to the ungrounded side of C313 (fig. 103).

(3) Set the MAIN POWER switch in the ON position.

(4) Following the instructions contained in TM 11–1214, Oscilloscope OS–8/U, adjust the oscilloscope controls to display the 120-cps hum signal.

(5) Adjust hum balance adjustment R347 (fig. 103) for minimum hum amplitude. Use maximum vertical gain to insure the proper hum minimum.

(6) Set the MAIN POWER switch in the OFF position and disconnect the oscilloscope leads.

f. 72-Kc Frequency Adjustment. Use Frequency Meter Set SCR–211(*) and follow the instructions contained in TM 11–300, Frequency Meter Sets SCR–211–A, B, C, D, E, F, J, K, L, M, N, O, P, Q, R, T, AA, AC, AE, AF, AG, AH, AJ, AK, AL, AN, to make the 72-kc frequency adjustment. The 72-kc frequency adjustment coil L302 is accessible through a hole in the high-voltage power supply shield.

(1) Loosely couple the antenna lead from the frequency meter to rf oscillator V309 by injecting the antenna lead a short distance in the hole in the high-voltage power supply shield (avoid contacting the lead with parts within the shield).

(2) Set the MAIN POWER switch in the ON position and adjust L302 for a reading of 144-kc on the frequency meter which indicates an rf oscillator frequency of 72 kc. The nominal frequency is in the range of 70 to 73 kc.

(3) Set the MAIN POWER switch in the OFF position.

217. Adjustment of Azimuth Indicator Mounted in Cabinet

a. General.

(1) Replace the bottom shield on the azimuth indicator chassis and replace the chassis in the electrical equipment cabinet.

(2) Connect the cabling according to the cabling diagrams (fig. 31 and 138).

(3) Set the MAIN POWER INDICATOR and GONIO DRIVE switches in the ON positions and adjust the IN-

TENSITY, FOCUS, DIMMER, HORIZONTAL and VERTICAL centering controls in accordance with the instructions given in paragraph 67*f*.

b. Control Modulator Tuning Adjustment.

(1) Set the FUNCTION switch on the df receiver in the STAND BY position and adjust the SIZE control on the azimuth indicator until the diameter of the circular pattern is approximately 3 inches.

(2) Adjust control modulator tuning adjustment C307 (fig. 102) for maximum pattern diameter.

(3) If C307 is not in the middle of its range when it is properly adjusted, set it in the middle of its range and pull the azimuth indicator out of the electrical equipment cabinet far enough to adjust C336 (fig. 103). Adjust C336 for maximum pattern diameter.

c. Rf Amplifier Tuning Adjustment. Adjust the slug at the top of T303 (fig. 102) for maximum pattern diameter. After one-half hour of operation, readjust the slug to compensate for slight drift.

d. Horizontal Deflection Transformer Adjustment. Adjust C317 at the top of horizontal deflection transformer T305 (fig. 102) for maximum pattern diameter in the horizontal plane. Adjust the SIZE control for a 4-inch pattern in the horizontal plane.

e. Vertical Deflection Transformer Adjustment.

(1) Adjust the SHAPE control to approximately one-half of its full clockwise position.

(2) Adjust the slug at the base of vertical deflection transformer T304 (fig. 104) which is accessible through a vent hole in the bottom shield for slightly less than a 4-inch circular pattern.

(3) Adjust C315 (fig. 102) at the top of T304 for maximum vertical amplitude.

(4) Readjust the SHAPE control and C315 until a 4-inch circular pattern occurs when C315 is adjusted for maximum pattern. A 4-inch circle should be obtained at approximately half-range of the SIZE control.

f. Cathode-Ray Tube Alinement.

(1) Remove F301 (fig. 102) to disable the drive motor.

(2) Remove cable W403 from J309 and W404 from J310.

(3) Rotate the goniometer bearing indicator scale for maximum vertical line length.

(4) Recheck the centering (*a* above). Note the degree of cathode-ray tube rotation necessary to orient the trace to 0° and 180°.

(5) Remove the alidade and lubricate the grommets supporting the tube with antistatic wax.

(6) Remove the cathode-ray tube base shield at the rear of the azimuth indicator and rotate the cathode-ray tube slightly to aline the trace to 0° to 180°.

(7) Replace the alidade and push the tube forward as close as possible to the alidade without impairing the operation of the rotatable cross hairs.

g. Azimuth Scale Check.

(1) Disconnect W401 from J307 and W402 from J308 and connect them to J309 and J310 respectively.

(2) The resulting horizontal line should be within ½° from 90° and 270°. Record the error.

(3) Reinsert F301 and connect all cables properly.

(4) Carefully set up the normal no-signal pattern as previously outlined.

(5) Again remove F301 and rotate the goniometer drive bearing indicator scale manually. Set the line pattern on 0° to 180°.

(6) Adjust the goniometer index to 0° on the white scale of the goniometer drive bearing indicator scale. Check the accuracy of the bearing indicator every 10° by comparing the aural scale with the visual scale readings. Record the data for future reference.

(7) Reinsert F301 and connect cable W401 through W404 to J307 through J310 as shown in figure 138.

h. Alinement of 455-Kc Circuits.

(1) Using cable W105, connect the rf output of R. F. Signal Generator Set

AN/URM–25 available at R F OUTPUT X–20,000 OPEN CIRCUIT jack J101 to J302 on the azimuth indicator.

(2) Follow the instructions contained in TM 11–5551 and set the controls on the signal generator to obtain a 10-millivolt, 455-kc, cw signal.

(3) Adjust T301 and R301 (fig. 102) for minimum circle diameter.

(4) Adjust the slug on L301 (fig. 102) so that approximately nine threads of the screw are visible.

(5) Disconnect the signal generator output from J302 and connect the IF OUTPUT jack on the df receiver to J302.

(6) Set the FUNCTION switch on the df receiver in the MGC position.

(7) Tune in a strong signal and adjust the RF GAIN control so that the hub of the propeller is approximately one-half inch in diameter.

(8) Retouch T301 for minimum hub diameter.

i. If Gain Adjustment.

(1) Detune the df receiver from the signal and advance the RF GAIN control to the 10 position.

(2) Use Electronic Multimeter TS–505/U to measure the noise voltage at the detector output. Follow the instructions contained in TM 11–5511 and measure the dc voltage at pin A of J301. Note the frequencies at which minimum dc voltage is obtained.

(3) At one of these points of minimum noise, adjust if gain adjustment R301 (fig. 102) to produce .7 volt dc as measured on the electronic multimeter.

j. Sense Phasing Adjustment.

(1) Retune the df receiver to a signal.

(2) Press the SENSE switch.

(3) Adjust sense phasing adjustment R340 (fig. 102) to erase any ghost sense patterns.

218. Alinement of Radio Frequency Amplifier AM–496/TRD–4

a. Test Equipment. R. F. Signal Generator Set AN/URM–25 is required to align the rf amplifier.

b. Procedure.

(1) Set the controls on the switch box and junction box as directed in paragraph 67*a* and *b*.

(2) Set the MAIN POWER switch on the azimuth indicator in the ON position.

(3) Set the controls on the df receiver in the positions shown in the following chart.

Control	Position
BANDWIDTH	2 KC
FUNCTION	MGC
LOCAL GAIN	6
RF GAIN	4
BFO	OFF

(4) Adjust the MEGACYCLE CHANGE and KILOCYCLE CHANGE controls on the df receiver to obtain a reading of .54 mc on the frequency indicating dial.

Caution: To prevent damage to the rf amplifier cabling, remove cable W205 from J205 (fig. 46) before opening the door. Before opening the door fully, remove plugs P202 and P203 from J206 and J207 located on the rear of the chassis mounted on the door (46 and 49, fig. 137).

(5) Open the rf amplifier door fully, pass cable W205 under the door and reconnect it to J205. Insert the rf amplifier test cable (13, fig. 25) between P202 and J206.

(6) To provide an external antenna for the rf signal generator, disconnect the whip antenna from the intercept receiver and connect the output of R. F. Signal Generator Set AN/URM–25 to the whip antenna cable.

(7) Turn the single-loop antenna so that the north leg of the loop (stamped on the loop-antenna plate) faces the whip antenna.

(8) Set the controls on the signal generator (TM 11–5551) to obtain a 30 percent 400-cps amplitude-modulated, .54-mc signal.

(9) Set the BAND SWITCH on the rf amplifier to Band 1 and adjust the tuning dial to .54 mc.

(10) After allowing several minutes for the equipment to warm up, adjust the df receiver gain controls until the modu-

lation from the signal generator signal is heard. If the modulation sounds distorted, the signal generator signal may be overloading the df receiver. Reduce the signal generator output until a clear note is heard.

(11) Use the alinement tool (9, fig. 25) to turn the adjusting screw on T201, located on the top of the chassis (41, fig. 137) until the volume of the modulation note is maximum. As an aid in making this adjustment, adjust T201 for maximum deflection of the needle on the CARRIER LEVEL meter on the df receiver.

(12) Set the controls on the signal generator to obtain a 30 percent 400-cps amplitude-modulated, 135-mc signal. Set the MEGACYCLE CHANGE and KILOCYCLE CHANGE controls on the df receiver to obtain a reading of 1.35 mc on the frequency indicating dial. Set the tuning dial on the rf amplifier to 1.35 mc.

(13) Repeat the procedures given in subparagraph (10) above and adjust C201 (43, fig. 137) until the volume of the modulation note is maximum. As an aid in making the adjustment, adjust C201 for maximum deflection of the needle on the CARRIER LEVEL meter on the df receiver.

(14) Recheck the alinement of T201 at .54 mc. If it is off, repeat the alinement procedure ((8)–(13) above).

(15) Continue the alinement on the subsequent bands. Use the following table.

Rf amplifier			Df receiver	Rf signal generator
BAND SWITCH (position)	Tuning dial (mc)	Adjustment	Dial reading (mc)	Output frequency (mc)
2	1.35	T202(40)	1.35	1.35
2	3.45	C202(44)	3.45	3.45
3	3.45	T203(39)	3.45	3.45
3	7.40	C203(45)	7.40	7.40
4	7.40	C205A(48)	7.40	7.40
4	14.80	T204(38)	14.80	14.80
5	14.80	C205B(47)	14.80	14.80
5	27.20	T205(37)	28.00	28.00

Note.—The numbers in parentheses following the adjustment locate the adjustment on figure 137. The rf amplifier tuning dial is set at 27.2 mc and calibrated for 28 mc because the frequency rises when the test cable is removed and the door is closed.

(16) Remove the test cable, close the rf amplifier door, and recheck all test frequencies. The accuracy should be ±1 percent at the ends of the bands and ±2 percent at all other frequencies.

219. Theory of Alinement of Radio Transmitter T–279/UR

a. The following items of test equipment are required to aline the radio transmitter.

(1) Multimeter TS–352/U.

(2) One of the calibrated Radio Receivers R–390/URR provided with Direction Finder Set AN/TRD–4A.

b. Radio Transmitter T–279/UR includes an rf oscillator followed by an rf amplifier. These two stages should track or tune together to the same resonant frequency for proper operation. With normal use of the radio transmitter, it is possible that one or more coils may require realinement at sometime.

c. For proper tracking, the rf oscillator and rf amplifier stages should have equal minimum capacities, and the inductances should be equal. Whip antenna E603 (fig. 135) is connected to the rf amplifier tuned circuit; therefore, the antenna capacitance of about 30 micro microfarads ($\mu\mu$f) is in parallel with rf amplifier tuning capacitor C612. The two ganged tuning capacitors have equal minimum capacities; trimmer capacitor C602, therefore, is connected in parallel with the rf oscillator tuning capacitor C601 so that its minimum capacity can be adjusted to match the minimum capacitance of the rf amplifier stage. This capacitor determines the bandwidth or frequency ratio covered on each band, and should not be readjusted unless absolutely necessary. If capacitor C602

is not properly adjusted, it will be impossible to aline any of the coils so that the two stages tune together at both ends of the band.

d. The frequency range of each rf oscillator coil is made to coincide with the dial calibration by means of a tuning slug in each coil. If the mechanical coupling between the dial drive and variable capacitor has not been tampered with, incorrect frequency calibration of the tuning dial indicates that realinement of the rf oscillator coils is necessary.

e. After alinement of the rf oscillator coils (par. 220), or when the current drawn by the rf amplifier stage is excessive, the rf amplifier coils must be realined. The current drawn by the rf amplifier may be measured by disconnecting the +135-volt lead from the battery terminal strip (terminal 1 of E602) and inserting a dc milliammeter in series with the circuit (use the 0- to 50-milliampere range of Multimeter TS–352/U). Set the TRANSMITTER switch in the ON position and the MCW-CW switch in the CW position. Turn the OUTPUT knob fully clockwise for the maximum output. When new batteries are used, the current readings at various frequencies should be close to those shown in the table below.

Frequency (mc)	Current (ma)
.5	6.5
1	5
1	6
2	6
2	7
4	7
4	9
8	8
8	13
16	11
16	17
32	16

220. Alinement of Rf Oscillator V601

a. Set the TRANSMITTER switch in the OFF position. Turn the radio transmitter on its side and remove the four knurled hold-down screws on the bottom of the case. Pull the chassis assembly out of the case.

b. Extend the antenna to maximum height and set the TRANSMITTER switch in the ON position, the MCW-CW switch in the CW position, and turn the OUTPUT control fully counterclockwise. Refer to instructions contained in TM 11–856. Set the controls on the radio receiver to receive the cw signal from the radio transmitter.

c. Set the MEGACYCLE CHANGE and KILOCYCLE CHANGE controls on the radio receiver to obtain a reading of .5 mc on the frequency indicating dial. Set the BANDSWITCH on the radio transmitter in the .5–1MC position and adjust the tuning control to read .5 mc on the tuning dial.

d. Use the alinement tool (9, fig. 25) and adjust the tuning slug of L601 (fig. 116) until the radio transmitter signal received by the radio receiver is maximum as indicated by maximum deflection of the LINE LEVEL and CARRIER LEVEL meters on the radio receiver.

e. Set the tuning control on the radio transmitter to read 1 mc on the tuning dial and set the MEGACYCLE CHANGE and KILOCYCLE CHANGE controls on the radio receiver to read 1 mc on the frequency indicating dial. If the radio transmitter dial is incorrect at the opposite end of the dial, an incorrect setting of C602 is indicated.

Note. When capacitor C602 is not correctly adjusted, it will be impossible to make the dial calibrations correspond to the rf oscillator frequency on any band. Do not disturb the adjustment of C602 until the other bands have been checked (*f* below).

f. Repeat procedures given in *d* and *e* above for the band, frequencies, and coils shown in the table below. The location of the coils is shown in figure 116. (Band 1 (.5–1MC) which was discussed above is included in the table.)

BANDSWITCH position	Calibration frequencies (mc)	Coil
.5–1MC	.5	L601
.5–1MC	1	
1–2MC	1	L602
1–2MC	2	
2–4MC	2	L603
2–4MC	4	
4–8MC	4	L604
4–8MC	8	
8–16MC	8	L605
8–16MC	16	
16–30MC	16	L606
16–30MC	30	

g. If the rf oscillator does not correspond to the dial calibration on any band, adjust capacitor C602 (fig. 117) as follows: If the rf oscillator frequency is too great, increase C602 until the range covered by the rf oscillator is decreased to the range shown on the dial; if the rf oscillator range is too narrow, decrease C602 until the range covered by the rf oscillator is increased to the range shown on the dial.

h. After all bands have been alined, recheck the frequency of each coil. Turn the TRANSMITTER switch to the OFF position.

221. Alinement of Rf Amplifier V602

a. Insert Multimeter TS–352/U in the positive 135-volt line as directed in paragraph 219*e*. Extend the antenna to maximum height.

b. Set the TRANSMITTER switch in the ON position, the MCW-CW switch in the CW position, and turn the OUTPUT knob clockwise for maximum output.

c. Set the BANDSWITCH on the .5–1MC position and vary the tuning control to read .5 mc on the tuning dial. Vary the tuning slug of L607 (fig. 116) to obtain minimum plate current as read on the multimeter.

d. Vary the tuning control to obtain a reading of 1 mc on the tuning dial and check to see that L607 also is tuned at this frequency for minimum plate current by varying the slug. If the two adjustments differ slightly, readjust the slug of L607 by a small amount so that the plate currents are equal on both frequencies.

e. Repeat procedures given in *c* and *d* above for the bands, frequencies, and coils shown in the following table. The location of the coils is shown in figure 116. (Band 1 (.5–1MC) discussed above is included in the table.)

BANDSWITCH position	Calibration frequencies (mc)	Coil
.5–1MC	.5	L607
.5–1MC	1	
1–2MC	1	L608
1–2MC	2	
2–4MC	2	L609
2–4MC	4	
4–8MC	4	L610
4–8MC	8	
8–16MC	8	L611
8–16MC	16	
16–30MC	16	L612
16–30MC	30	

222. System Alinement

The paragraphs listed in the following table cover the system alinement of Direction Finder Set AN/TRD–4A.

Contents	Paragraph
Orienting Adcock antenna to compass points	36
General	44
Orienting crossed-loop and single-loop antennas to compass points.	46
Alining azimuth scale on the rf amplifier to single-loop antenna orientation.	47
Alinement of propeller-shaped pattern to the physical orientation of the crossed-loop antenna.	48
Alinement of propeller-shaped pattern to physical orientation of the Adcock antenna.	49
Alinement of the bearing indicator scale on the goniometer drive to Adcock and crossed-loop antenna orientation.	50
Checking visual bearings using the radio transmitter.	51

Section X. FINAL TESTING

223. General

This section is intended as a guide to be used in determining the quality of a repaired Direction Finder Set AN/TRD–4A. The minimum test requirements outlined in paragraphs 225 through 232 may be performed by maintenance personnel with adequate test equipment and the necessary skills. Repaired equipment meeting these requirements will furnish uniformly satisfactory results. The final testing of Radio Receiver R–390/URR is covered in TM 11–856.

224. Equipment Required for Final Testing

a. The following chart lists the items of test equipment required and the associated technical manual.

Equipment	Technical Manual
R. F. Signal Generator Set AN/URM–25	TM 11–5551
Electronic Multimeter TS–505/U	TM 11–5511
Electrical Goniometer GO–5/GRD	See note
Electrical Goniometer GO–6/GRD	See note

Note. The two goniometers listed in the above chart are in addition to the goniometers provided with Direction Finder Set AN/TRD–4A. Information concerning the goniometers is contained in this manual.

b. The following items also are required.

(1) T adapter.

(2) Length of coaxial cable (8 ft 8 in.).

225. Components Required

The overall performance tests described in paragraphs 226 through 228, require the following components, assembled and ready for operation.

Component	Quantity
Switch Box SA–345/U	1
Junction Box J–95B/CRD–2	1
Azimuth Indicator IP–137/GRD	1
Electrical Goniometer GO–5/GRD	2
Electrical Goniometer GO–6/GRD	1
Goniometer Drive MX–1170/GRD	1
Radio Receiver R–390/URR	1
Radio Frequency Transmission Line Switch SA–346/GRD.	1
Cable Assembly Set CG–1097/TRD–4 (170 ft.)	2 sets
Interconnecting cords and cables necessary for system operation.	1 set

226. Balance Test
(A, fig. 121)

a. Refer to A, figure 121 and connect the R.F. Signal Generator Set AN/URM–25 output to the antenna connection of the north antenna coupler through a dummy antenna consisting of a resistor (R1) in series with the undergrounded side of the signal generator output. The size of the resistance chosen should be such that its resistance plus the output impedance of the signal generator (TM 11–5551) is equal to 100 ohms.

b. Connect cables W101 through W104 from the antenna couplers to the signal goniometer and ground the antenna couplers as shown in A, figure 121.

c. Set the tuning controls on the signal generator and the receiver to one of the test frequencies listed in *i* below. Adjust the signal generator controls to obtain a 100-microvolt cw output.

d. Perform the operating procedure for visual operation with the Adcock antenna (pars. 65–67).

e. Refer to TM 11–5511. Use the electronic multimeter to measure the dc voltage at pin A of video input jack J301 on the azimuth indicator. Adjust the RF GAIN control on the receiver to read 3 volts dc on the electronic multimeter.

f. Connect the antenna connection on the south antenna coupler to the antenna connection on the north antenna coupler and connect the signal generator output through R1 to this junction. Without changing the receiver controls, increase the signal generator output until the electronic multimeter again reads 3 volts. The ratio of this signal generator output to 100 microvolts is the balance ratio. The minimum balance ratio for each test frequency is given in the chart in *i* below.

g. Repeat the procedure given in *a* through *f* above for each of the test frequencies listed in the chart in *i* below. If the balance ratios obtained do not exceed those listed in the chart in *i* below, the north and south connections are balanced.

h. To check the east and west connections, proceed as follows:

(1) Apply the signal generator output through the dummy antenna (R1) to the antenna connection on the east antenna coupler.

(2) Follow the procedure given in *b* through *g* above with the following exception: For the procedure in *f* above connect the antenna connections on the east and west antenna couplers together and apply the signal to this junction.

i. The balance ratios obtained shall not be less than the following:

Test frequencies (mc)	Electrical Goniometer	Balance ratio limits
.55	GO–5/GRD	100
1.20	GO–5/GRD	60
3.0	GO–5/GRD	60
5.0	GO–5/GRD	60
8.0	GO–5/GRD	40
10.0	GO–5/GRD	40
8.0	GO–6/GRD	50
10.0	GO–6/GRD	40
13.0	GO–6/GRD	25
16.0	GO–6/GRD	25
18.0	GO–6/GRD	20
22.0	GO–6/GRD	20
26.0	GO–6/GRD	20
29.7	GO–6/GRD	20

227. Sensitivity Tests

a. Follow the procedures given in paragraph 226*a* and *b*.

b. Set the tuning controls on the signal generator and receiver to one of the test frequencies listed in the chart in *f* below. Reduce the signal generator cw output to zero.

c. Use the electronic multimeter to measure the dc voltage at pin A of video input jack J301 on the azimuth indicator.

d. With the goniometer drive rotating, adjust the RF GAIN control on the receiver to obtain a reading of .5 volt (noise) on the electronic multimeter.

e. Without changing the receiver controls, advance the signal generator output control until a reading of 1.5 volts is obtained on the electronic multimeter. The microvolt output reading of the signal generator is the df sensitivity. The maximum df sensitivity readings for each of the test frequencies is given in the chart in *f* below.

f. Repeat the procedures given in *a* through *f* above for each test frequency. The df sensitivity should not exceed the following limits.

Test frequency (mc)	Electrical Goniometer	Sensitivity limits (uv)
.55	GO–5/GRD	6.0
1.0	GO–5/GRD	5.0
3.0	GO–5/GRD	6.0
5.0	GO–5/GRD	9.0
8.0	GO–5/GRD	10.0
10.0	GO–5/GRD	9.0
8.0	GO–6/GRD	8.0
10.0	GO–6/GRD	7.0
13.0	GO–6/GRD	7.5
16.0	GO–6/GRD	16.0
18.0	GO–6/GRD	15.0
22.0	GO–6/GRD	12.0
26.0	GO–6/GRD	15.0
29.7	GO–6/GRD	18.0

228. Bearing Accuracy and Sense Check (B, fig. 121)

a. General. In addition to the signal and indicator goniometers which are provided with Direction Finder Set AN/TRD–4A, two additional goniometers are required for this test. Electrical Goniometer GO–5/GRD is required for the low-frequency range and Electrical Goniometer GO–6/GRD is required for the high-frequency range. The additional goniometer is used as a balanced transformer to connect the unbalanced output of the signal generator to the north and south antenna couplers. In the following discussion, the reference symbols and frequencies not inclosed in parentheses refer to the low-frequency goniometer (Electrical Goniometer GO–5/GRD) and the reference symbols and frequencies enclosed in parentheses refer to the high-frequency goniometer (Electrical Goniometer GO–6/GRD). The goniometer schematics are shown in figures 125 and 126.

b. Visual Bearing Check (B, fig. 121).

(1) Connect a 100-microvolt, 5-mc (18-mc), cw signal from R.F. Signal Generator Set AN/URM–25 to the rotor J405 (J505) of the extra goniometer being used as the balanced transformer.

(2) Connect one stator winding side J403 (J503) of one of the balanced transformer stator windings to the antenna connection on the north antenna coupler, and the other side J404 (J504) of the same stator winding to the antenna connection of the south antenna coupler.

(3) Ground the antenna connections of the east and west antenna couplers and connect cables W101 through 104 from the antenna couplers to the signal goniometer as shown in B, figure 121.

(4) Follow the operating procedure for visual operation with the Adcock antenna contained in paragraphs 65 through 67*q* to obtain the propeller-shaped pattern.

(5) Adjust the position of the balanced transformer rotor to obtain the best propeller-shaped pattern.

(6) Unlock the SWIVEL PLATE LOCK on top the goniometer drive (fig. 43) and rotate the signal goniometer housing to produce a bearing of 0° to 180°. Lock the swivel plate.

c. Aural Bearing Check. With the GONIO DRIVE switch in the OFF position, adjust the position of the bearing indicator scale on the goniometer drive to produce a null in the loudspeaker output. Unlock the INDEX LOCK (fig. 43) and set the index mark on the bearing indicator scale to a bearing of 0°. Lock the index.

d. Bearing Error. Check the visual and aural readings of the north bearing at each of the test frequencies listed in the chart in paragraph 227*f*. These readings shall not differ from the readings obtained at 5 mc (18 mc) in *b* and *c* above by more than 2° over the fre-

quency range of .55 to 18 mc and by more than 4.5° over the frequency range of 18 to 30 mc.

e. Reciprocal Bearing Error. The reciprocal bearings should be within 2° of 180° from the bearings obtained in *d* above at all frequencies. A split bearing pattern (E, fig. 48), which results in a reciprocal bearing error, may occur over a small portion of the azimuth scale at all frequencies; this is due to the lack of perfect concentricity. If such split exceeds 1°, check the tightness of the goniometer mounting nuts. The drawn-in (item 6 par. 69) or bearing blur of the pattern shall not exceed one-eighth inch at any frequency.

f. Bearing Checks at 45°, 90°, 135°, 180°, 225°, 270°, and 315°. Leave cables W101 through W104 connected as shown in B, figure 121 and check the visual and aural bearings at all test frequencies. Use each of the antenna coupler connections listed below.

(1) *Bearing checks at 45°.*
  (*a*) Connect the north antenna coupler to the east antenna coupler and the south antenna coupler to the west antenna coupler.
  (*b*) Connect J403 (J503) on the balanced transformer to the north and east antenna coupler and connect J404 (J504) to the south and west antenna coupler.

(2) *Bearing checks at 90°.*
  (*a*) Connect J403 (J503) on the balanced transformer to the east antenna coupler and J404 (J504) to the west antenna coupler.
  (*b*) Ground the north and south antenna couplers.

(3) *Bearing checks at 135°.*
  (*a*) Connect the south antenna coupler to the east antenna coupler and connect the north antenna coupler to the west antenna coupler.
  (*b*) Connect J403 (J503) to the south and east antenna couplers and J404 (J504) to the north and west antenna couplers.

(4) *Bearing checks at 180°.* Reverse the connections used for the 0° bearing check (*b*(2) above).

(5) *Bearing checks at 225°.* Reverse the connections for the 45° bearing check ((1) above).

(6) *Bearing checks at 270°.* Reverse the connection for the 90° bearing check ((2) above).

(7) *Bearing checks at 315°.* Reverse the connections for the 135° bearing check ((3) above).

g. Sense Tests (C, fig. 121). Checks on the sense bearings are made for both visual and aural-null bearings at 45°. Use a 10-mc cw signal for both Electrical Goniometer GO–5/GRD and Electrical Goniometer GO–6/GRD as the signal goniometer. When making the sense checks, the balanced transformer is not used.

(1) Connect the signal generator output through a T adapter and an 8-foot, 8-inch length of coaxial cable to the antenna couplers as shown in C, figure 121. The 8-foot, 8-inch coaxial cable simulates the spacing presented by the Adcock monopoles to a signal arriving from 45°.

(2) Connect cables W101 through W104 from the output connections of the antenna couplers to the signal goniometer as shown in B, figure 121.

(3) The arrowhead sense pattern obtained when the SENSE switch on the azimuth indicator is pressed should point towards the 45° mark on the azimuth scale surrounding the cathode-ray tube. If the arrowhead does not point to 45°, check the cabling to the indicator and signal goniometers.

229. Rf Amplifier Sensitivity Test (D, fig. 121)

a. The sensitivity of the rf amplifier set is determined by applying the output of an R.F. SIGNAL GENERATOR Set AN/URM–25 to the rf amplifier, turning the rf signal generator modulation on and off, and measuring the audio output of the df receiver. The carrier level of the rf signal generator output necessary to produce a 6-db difference in audio output is the sensitivity of the rf amplifier. To perform the sensitivity test, follow the procedure given in *b* through *o* below.

b. Connect a 115-volt, 50- to 60-cps, ac power source to P201 on the rf amplifier and to POWER jack J104 on the df receiver.

c. Connect the rf amplifier output at J205 to J108 on the df receiver. Disconnect the crossed-

loop antenna from the loop antenna jacks on top of the rf amplifier.

d. Plug Test Lead CX–1363/U, which is provided with the rf signal generator, into the R.F. OUTPUT X MULT. jack J102.

e. Connect a noninductive 1-ohm resistor in series with the two noninductive 50-ohm resistors as shown in D, figure 121.

f. Connect the alligator clips on Test Lead CX–1363/U to the 50-ohm resistors as shown in D, figure 121.

g. Connect a test lead from one side of the 1-ohm resistor to the loop antenna connection on top of the rf amplifier and a test lead from the other side of the 1-ohm resistor to the S loop antenna connection on top of the rf amplifier (D, fig. 121).

h. Set the controls on the df receiver as follows:

Control	Position
BANDWIDTH	2 KC
BFO	OFF
FUNCTION	MGC
RF GAIN	7
LOCAL GAIN	6

i. Set the tuning controls on the rf amplifier, rf signal generator, and df receiver to .6 mc. Set the POWER switch on the rf amplifier on the ON position and the ANT. SELECT. switch in the SINGLE LOOP position.

j. Turn the rf signal generator set on as directed in TM 11–5551 and adjust the modulation to 400 cps at 30 percent. Allow a 15-minute warm-up period.

k. Adjust the tuning controls on the rf amplifier and df receiver for maximum signal. Keep the sound at a comfortable listening level by adjusting the AF GAIN control on the df receiver.

l. Set the RF GAIN control on the df receiver to 7, turn the rf signal generator modulation off, and adjust the AF GAIN control on the df receiver for a reading of 0 db on the df receiver LINE LEVEL meter.

m. Turn the rf signal generator modulation on and adjust the rf signal generator carrier output control for a reading of 6 db on the df receiver LINE LEVEL meter.

n. Turn the rf signal generator modulation off and check the reading of the LINE LEVEL meter.

(1) If the reading on the LINE LEVEL meter is 0 db, the carrier level of the rf signal generator output is the rf amplifier sensitivity and should be less than 1,225 microvolts (μv).

(2) If the reading on the LINE LEVEL meter is not 0 db, proceed as follows:

(*a*) Readjust the AG GAIN control for a reading of 0 db on the LINE LEVEL meter.

(*b*) Turn the rf signal generator modulation on. Adjust the rf signal generator carrier output control to read 6 db on the LINE LEVEL meter.

(*c*) Repeat (*a*) and (*b*) above until the reading on the LINE LEVEL meter changes from 0 db with the modulation off to 6 db with the modulation on. The carrier level of the rf signal generator output should not exceed 1,225 μv.

o. Perform the sensitivity test as directed in *b* through *n* above at each of the frequencies listed below. The sensitivities obtained should not exceed the values given in the chart below.

Frequency (mc)	Rf signal generator output (μv)
.6	1,225
1.3	932
1.4	767
3.3	373
4	373
7	270
7.5	212
14	186
15	390
28	156

230. Calibration Accuracy Test, Rf Amplifier Tuning Dial

a. With the equipment connected as directed in paragraph 229*b* through *g* and the df receiver controls set as directed in paragraph 229*h*, check the accuracy of the rf amplifier tuning dial calibration at the high- and low-frequency end of each band.

b. Set the tuning controls on R.F. Signal Generator Set AN/URM–25, the rf amplifier, and the df receiver to .54 mc. Set the POWER switch on the rf amplifier in the ON position and the ANT. SELECT. switch in the SINGLE LOOP position.

c. Turn on the rf signal generator as directed in TM 11–5551 and adjust the modulation to 400 cps at 30 percent. Allow a 15-minute warm-up period.

d. Adjust the df receiver gain controls until the modulation from the rf signal generator signal is heard. If the modulation sounds distorted, the rf signal generator signal may be overloading the df receiver. Reduce the rf signal generator output until a clear 400-cps note is heard.

e. Adjust the rf amplifier tuning dial for a maximum 400-cps. The reading on the rf amplifier tuning dial should be .54 mc ±1 percent.

f. Check the rf amplifier tuning dial calibration at the frequencies listed in the chart in paragraph 218*b*(15). If the reading differs by more than ±1 percent at any of the frequencies, calibrate the tuning dial (par. 218).

g. Turn the rf signal generator power off and disconnect the rf signal generator output from the N and S loop antenna connections. Replace the north-south loop antenna.

231. Reciprocal Bearing Error and Sense Test

a. Set the rf amplifier up under field operating conditions and operate the direction finder set as directed in paragraphs 75 through 77 and the radio transmitter as directed in paragraphs 80 through 82 to check the reciprocal bearing error and sense test.

b. Place the radio transmitter just close enough to the shelter to produce a strong signal when the radio transmitter controls are adjusted to obtain amplitude-modulated .54-mc signal.

c. Rotate the rf hand wheel to locate a null. Note the bearing on the white scale.

d. Rotate the rf amplifier hand wheel to the opposite null and note the bearing on the red scale.

e. The difference between the two readings (*c* and *d* above) should not exceed 1°.

f. Perform the bearing error test outlined in *a* through *e* above at the low-, middle-, and high-frequency points of each band.

g. At each of the test frequencies in *f* above, rotate the rf amplifier hand wheel 90° from one of the null positions.

h. Press the sense switch on the rf amplifier to the sense white position and note the reading on the df receiver LINE LEVEL meter.

i. Press the sense switch on the rf amplifier in the sense red position and note the reading on the df receiver LINE LEVEL meter.

j. Adjust the SENSE GAIN control on the rf amplifier to produce the greatest difference in the LINE LEVEL meter readings obtained in *h* and *i* above. The difference in the two readings should be no less than 6 db at all frequencies up to 20 mc.

Note.—When making the reciprocal bearing error and sense test, take into account the site conditions. A poor direction finding site may produce errors entirely independent of the rf amplifier.

232. Radio Transmitter Output Test

a. Fully extend the radio transmitter antenna and clip the rf probe of Electronic Multimeter TS–505/U to the antenna near the base. Connect the probe ground connection to the radio transmitter chassis.

b. Open the radio transmitter cover and set the TRANSMITTER switch in the ON position. Set the MCW-CW switch in the CW position and rotate the INCREASE OUTPUT control fully clockwise for maximum output.

c. The readings obtained on the electronic multimeter for each of the test frequencies shall not be less than those listed in the chart below.

Frequency (mc)	Rf volts
.5	40
1	40
2	35
4	25
8	18
18	3.5

CHAPTER 7

SHIPMENT AND LIMITED STORAGE AND DEMOLITION TO PREVENT ENEMY USE

Section I. SHIPMENT AND LIMITED STORAGE

233. Disassembly

The following instructions are supplied as a guide for preparing Direction Finder Set AN/TRD–4A for shipment.

a. Disconnect all outside power cords and rf cords from the shelter.

b. Dismantle the Adcock antenna masts and stow the sections, disks, stakes and guys in the four canvas containers.

c. Pull up the stakes that hold the mast bases and remove the mast bases from the counterpoise.

d. Disconnect and remove the ground straps at the counterpoise and pull up the counterpoise clamps and guy stakes.

e. Fold the counterpoise, reversing the procedure shown in figure 8, and wrap the counterpoise in the counterpoise container.

f. Dismantle the two whip antennas on the shelter.

g. Reel up the antenna rf cords and the power cable. Remove the crank and place it in the reel box.

h. Fold the crossed-loop antenna and pull it out of its socket on the shelter roof.

i. Detach the switch box from its support.

234. Preparing Equipment for Transit

a. After disassembling Direction Finder Set AN/TRD–4A, take inventory of all equipment to make sure that no parts are missing.

b. Check completeness of parts against the table of components (par. 10).

c. Wipe each item clean and dry. Remove the batteries from the radio transmitter.

d. Pack all the parts in their respective containers and pack the containers and other components in the shelter. Secure them with straps provided (figs. 19–25). Use the table of components as a guide.

e. Clear all loose items from the console; stow and secure them in compartments. Secure the antennas, radio transmitter, ladder and chairs in locations shown in figure 19.

f. Drain the fuel tank, fuel lines, and filter bowl (TM 11–2599).

235. Loading Shelter on a Truck

The following instructions are supplied as a guide for moving the shelter from the unpacking site to the operating site.

a. Be sure that all equipment in the shelter is mounted securely or strapped down (figs. 19 and 20).

b. Clear off loose items from the table; stow and secure them in the table arm rests, the storage cabinet, and the storage bins.

c. Close and latch all windows and doors.

d. Hook the loading skids over the tail gate hinge pin of a 2½-ton 6 by 6 cargo truck. Be sure that the skids are parallel to each other and are attached securely. Attach haul ropes to the two tow rings at the end of the floor section; the rings at either end may be used.

e. Slowly drag the shelter to the truck and slide it up the skids into the body of the truck. Use truck winches. Steady the shelter while it is being drawn up on the skids to prevent it from tipping or slipping sideward. Avoid bumping it against the truck.

Caution: Never hoist the entire shelter by tow rings or the handles on the floor or the roof section or by the tie-down fitting on the roof section.

428027 O - 57 - 14

f. Locate the shelter approximately in the center of the truck bed. Secure it in place with the four hold-down bars (fig. 20). Extensions are furnished to increase the length of the hold-down bars by 10 inches.

g. Slide the loading skids under the shelter, between the runners.

Note.—If the spare antenna comprising four sections, a loading disk and a container are shipped separately, remove the 3⅞ diameter protective tube from one of the other four containers and install it in the pocket with the loading disk to protect the loading disk.

236. Field Repacking for Shipment

a. Be sure that all equipment in the shelter is mounted securely or strapped down (figs. 19 and 20).

b. Bolt four L brackets to the edges of the shelter floor section (fig. 4) and use the hold-down bars (fig. 4) to tie the floor section to the roof section.

c. Close the shelter door and all openings in the body of the shelter.

d. Adjacent to the shelter, construct the components of a wood-sheathed skid-base crate. Use lag screws or bolts to hold the crate members together. The crate is shown in figure 4 and the dimensions are given in the chart below.

Length	Width	Height	Volume	Weight
147 inches	84 inches	87 inches	622 cubic ft.	3,200 pounds

e. Install four hook bolts through the skids and floor members of the crate base (fig. 4) to engage the shelter tie-down rings at each lower corner of the shelter.

f. Raise the shelter and mount it on the crate base by inserting the four hook bolts into the four tie-down rings (fig. 4).

g. Cushion all sharp projections, edges, and projecting components on the exterior of the shelter by masking them with pads of flexible corrugated paper. Secure the pads with gummed tape. A cushioning shroud may be fitted over the shelter.

h. Erect the sides and top of the crate.

Section II. DEMOLITION OF MATERIEL TO PREVENT ENEMY USE

237. General

Demolition of the equipment will be accomplished only upon the order of the commander. The demolition procedures outlined in paragraph 238 will be used to prevent the enemy from using or salvaging this equipment.

238. Methods of Destruction

a. Smash. Smash the crystals, controls, tubes, coils, switches, capacitors, transformer, goniometers and headsets; use sledges, axes, handaxes, pickaxes, hammers, crowbars, or heavy tools.

b. Cut. Cut cords, headsets, and wiring; use axes, handaxes, or machetes.

c. Burn. Burn cords, resistors, capacitors, coils, wiring, and technical manuals; use gasoline, kerosene, oil, flame throwers, or incendiary grenades.

d. Bend. Bend panels, cabinets, and chassis.

e. Explosives. If explosives are necessary, use firearms, grenades, or TNT.

f. Disposal. Bury or scatter the destroyed parts in slit trenches, fox holes, or throw them into streams.

g. Destroy. Destroy everything.

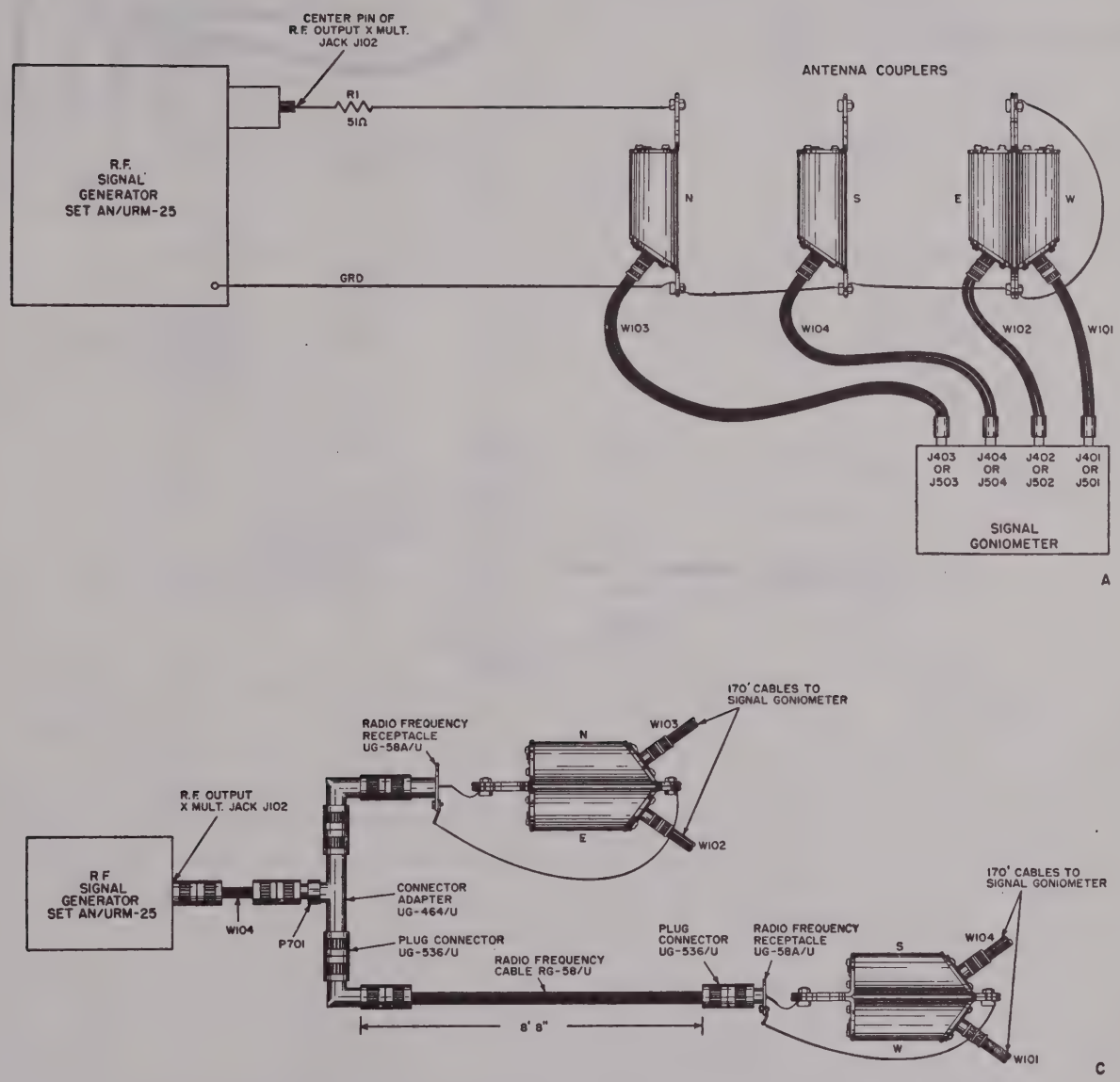

Figure 121. Connection of equipment for final testing.

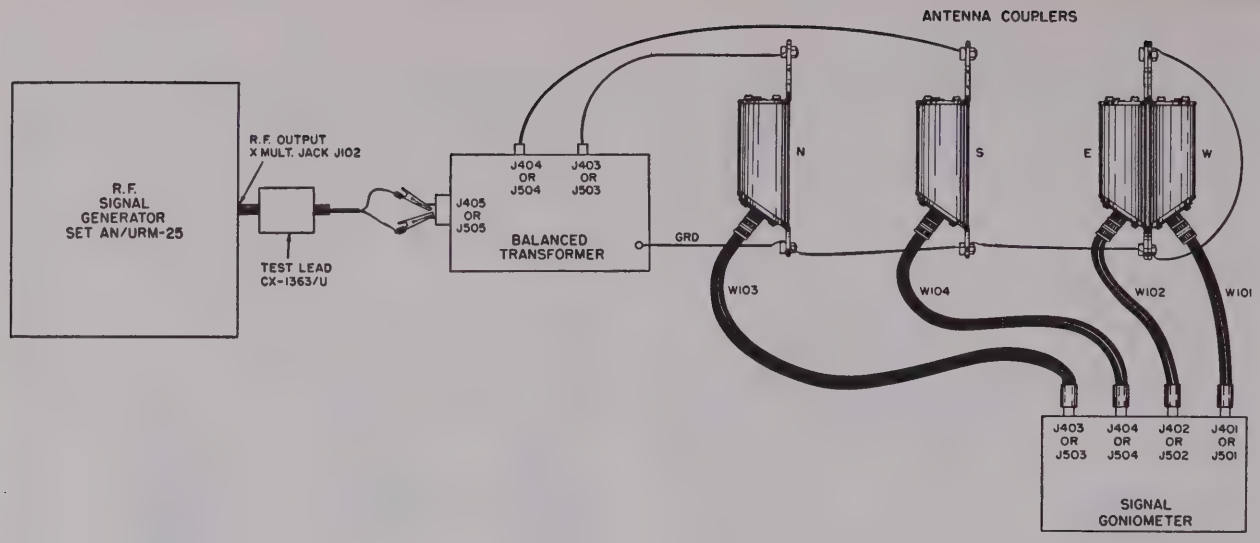
ANTENNA COUPLERS
R.F. SIGNAL GENERATOR SET AN/URM-25
R.F. OUTPUT X MULT. JACK J102
TEST LEAD CX-1363/U
J405 OR J505
J404 OR J504
J403 OR J503
BALANCED TRANSFORMER
GRD
N
S
E
W
W103
W104
W102
W101
J403 OR J503
J404 OR J504
J402 OR J502
J401 OR J501
SIGNAL GONIOMETER

B

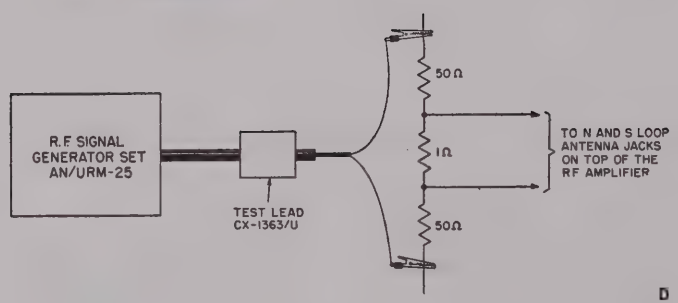
R.F SIGNAL GENERATOR SET AN/URM-25
TEST LEAD CX-1363/U
50Ω
1Ω
50Ω
TO N AND S LOOP ANTENNA JACKS ON TOP OF THE RF AMPLIFIER

D

TM688-221

RESISTOR COLOR CODE MARKING
(MIL-STD RESISTORS)

AXIAL-LEAD RESISTORS (INSULATED)

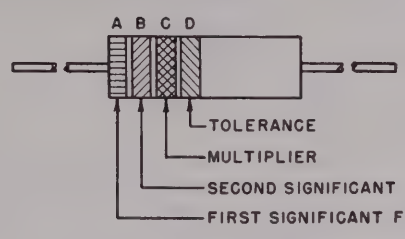

RC-COMPOSITION

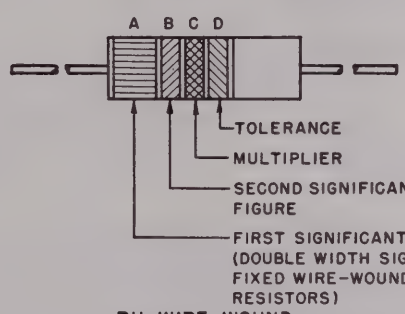

RU-WIRE-WOUND

RADIAL-LEAD RESISTORS (UNINSULATED)

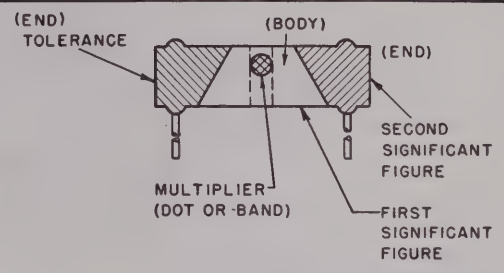

RZ-COMPOSITION

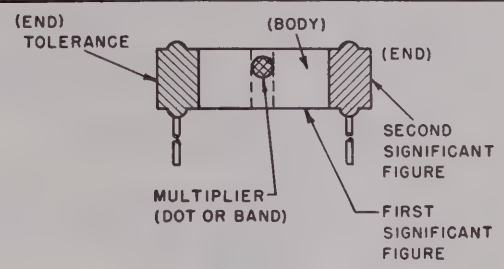

RZ-COMPOSITION

RESISTOR COLOR CODE

BAND A OR BODY*		BAND B OR END*		BAND C OR DOT OR BAND*		BAND D OR END*	
COLOR	FIRST SIGNIFICANT FIGURE	COLOR	SECOND SIGNIFICANT FIGURE	COLOR	MULTIPLIER	COLOR	RESISTANCE TOLERANCE (PERCENT)
BLACK	0	BLACK	0	BLACK	1	BODY	± 20
BROWN	1	BROWN	1	BROWN	10	SILVER	± 10
RED	2	RED	2	RED	100	GOLD	± 5
ORANGE	3	ORANGE	3	ORANGE	1,000		
YELLOW	4	YELLOW	4	YELLOW	10,000		
GREEN	5	GREEN	5	GREEN	100,000		
BLUE	6	BLUE	6	BLUE	1,000,000		
PURPLE (VIOLET)	7	PURPLE (VIOLET)	7				
GRAY	8	GRAY	8	GOLD	0.1		
WHITE	9	WHITE	9	SILVER	0.01		

*FOR WIRE-WOUND-TYPE RESISTORS, BAND A SHALL BE DOUBLE-WIDTH. WHEN BODY COLOR IS THE SAME AS THE DOT (OR BAND) OR END COLOR, THE COLORS ARE DIFFERENTIATED BY SHADE, GLOSS, OR OTHER MEANS.

EXAMPLES (BAND MARKING):
10 OHMS ±20 PERCENT: BROWN BAND A; BLACK BAND B; BLACK BAND C; NO BAND D.
4.7 OHMS ±5 PERCENT: YELLOW BAND A; PURPLE BAND B; GOLD BAND C; GOLD BAND D.

EXAMPLES (BODY MARKING):
10 OHMS ±20 PERCENT: BROWN BODY; BLACK END; BLACK DOT OR BAND; BODY COLOR ON TOLERANCE END.
3,000 OHMS ±10 PERCENT: ORANGE BODY; BLACK END; RED DOT OR BAND; SILVER END.

STD-R1

Figure 122. MIL STD resistor color codes.

CAPACITOR COLOR CODE MARKING
(MIL-STD CAPACITORS)

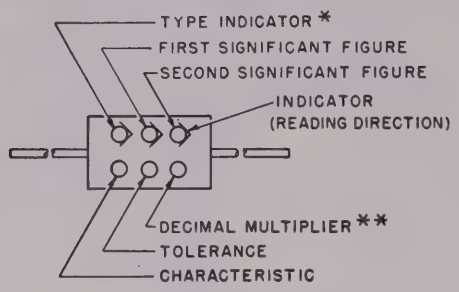

* BLACK DOT: MICA DIELECTRIC
SILVER DOT: PAPER DIELECTRIC
**INDICATES NUMBER OF ZEROS ON PAPER TYPE.

MICA (CM) AND PAPER (CN)

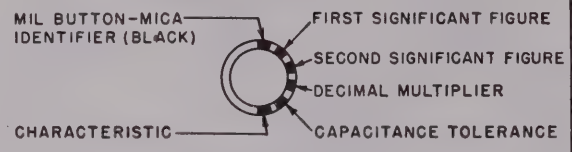

BUTTON-MICA (CB)

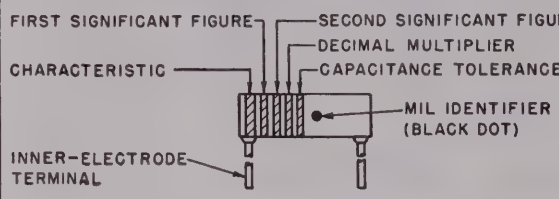

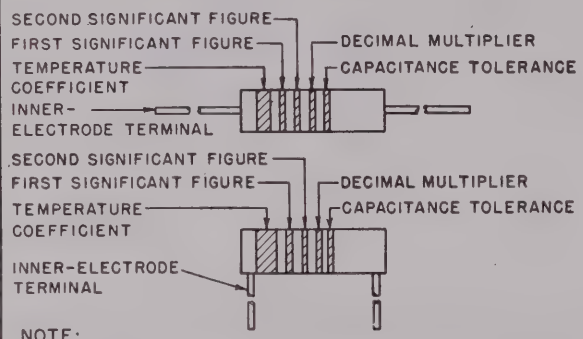

NOTE:
SPOTS MAY BE USED INSTEAD OF BANDS; TEMPERATURE COEFFICIENT MARKING IS LARGER.

CERAMIC-TEMPERATURE COMPENSATING (CC)

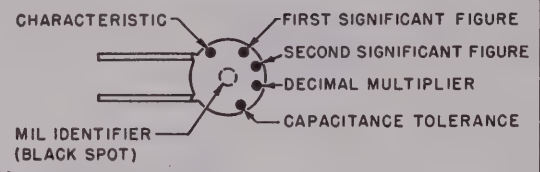

NOTES:
1. SPOTS MAY BE USED ON TUBULAR CAPACITORS; CHARACTERISTIC SPOT IS LARGER AND MIL IDENTIFIER IS ON SIDE DIAMETRICALLY OPPOSITE COLOR SPOTS.
2. MIL IDENTIFIER OF DISK TYPE IS ON REVERSE SIDE; CHARACTERISTIC SPOT IS LARGER OR SPACE BETWEEN CHARACTERISTIC AND TOLERANCE SPOTS IS THREE TIMES SPACE BETWEEN ADJACENT SPOTS.
3. TOLERANCE: YELLOW, +100%, −20%.

CERAMIC-GENERAL PURPOSE (CK)

CAPACITOR COLOR CODE

COLOR	SIG FIG.	MULTIPLIER		CHARACTERISTIC[1]				TOLERANCE[2]					TEMPERATURE COEFFICIENT (UUF/UF/°C)
		DECIMAL	NUMBER OF ZEROS	CM	CN	CB	CK	CM	CN	CB	CC OVER 10UUF	CC 10UUF OR LESS	CC
BLACK	0	1	NONE		A			20	20	20	20	2	ZERO
BROWN	1	10	1	B	E	B	W				1		−30
RED	2	100	2	C	H		X	2		2	2		−80
ORANGE	3	1,000	3	D	J	D			30				−150
YELLOW	4	10,000	4	E	P								−220
GREEN	5		5	F	R						5	0.5	−330
BLUE	6		6		S								−470
PURPLE (VIOLET)	7		7		T	W							−750
GRAY	8		8			X						0.25	+30
WHITE	9		9								10	1	−330(±500)[3]
GOLD		0.1						5		5			+100
SILVER		0.01						10	10	10			

1. LETTERS ARE IN TYPE DESIGNATIONS GIVEN IN MIL-C SPECIFICATIONS.
2. IN PERCENT, EXCEPT IN UUF FOR CC-TYPE CAPACITORS OF 10 UUF OR LESS.
3. INTENDED FOR USE IN CIRCUITS NOT REQUIRING COMPENSATION.

STD-CI

Figure 123. MIL STD capacitor color codes.

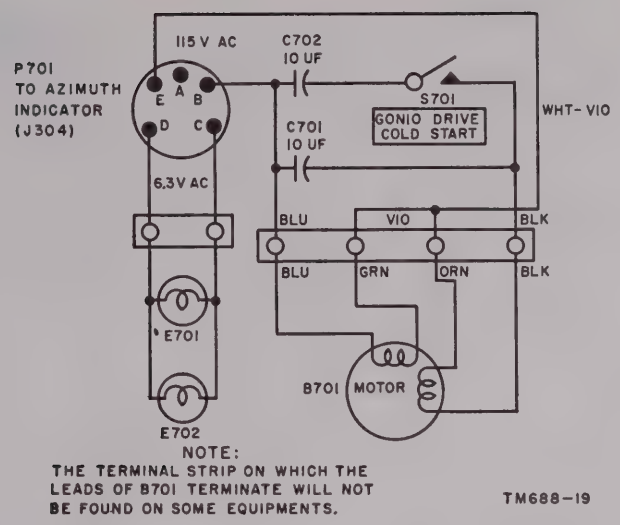

Figure 124. Goniometer Drive MX-1170/GRD, complete schematic diagram.

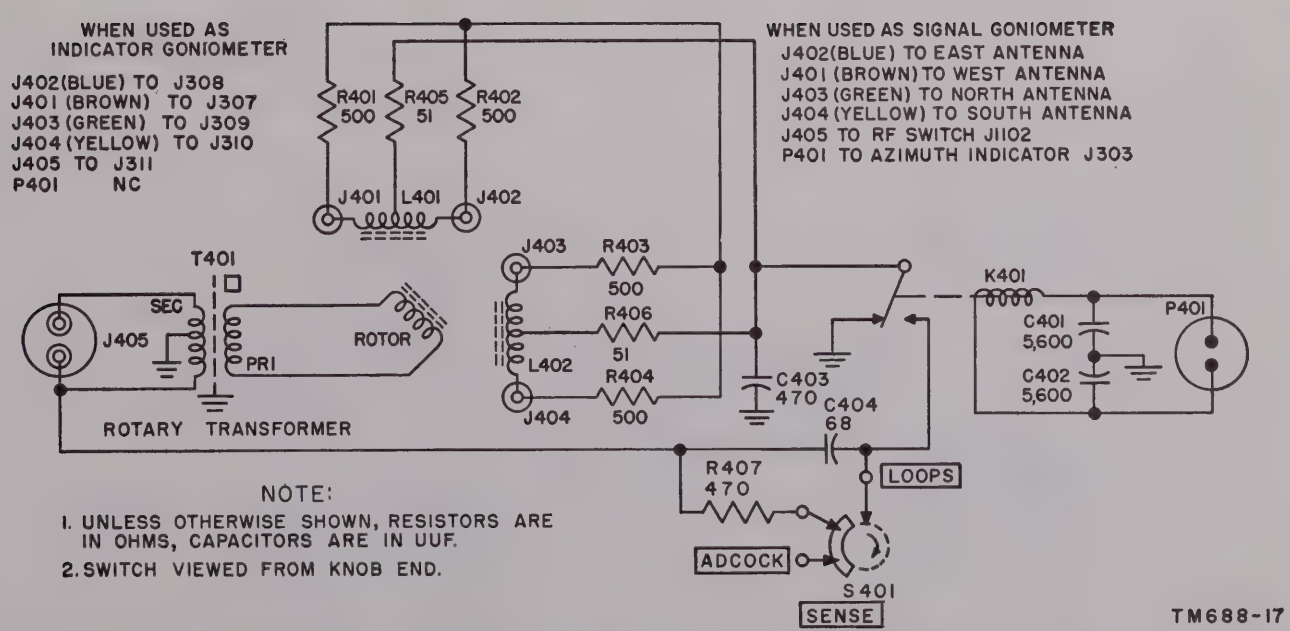

Figure 125. Electrical Goniometer GO-5/GRD, complete schematic diagram.

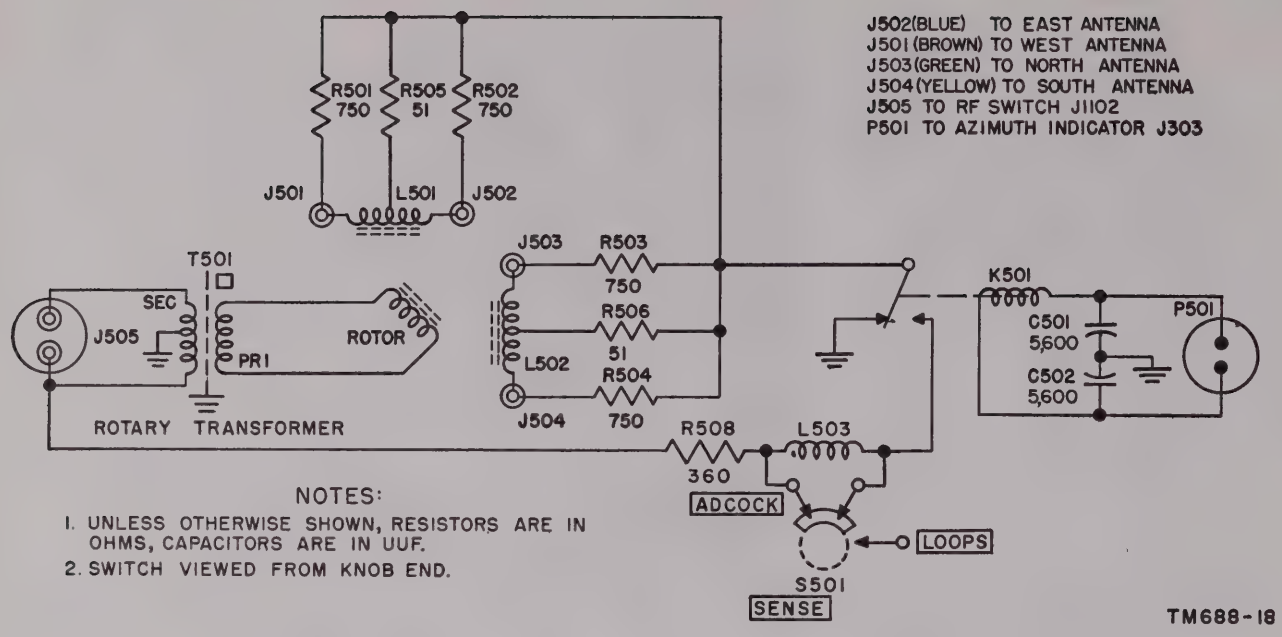

Figure 126. Electrical Goniometer GO-6/GRD, complete schematic diagram.

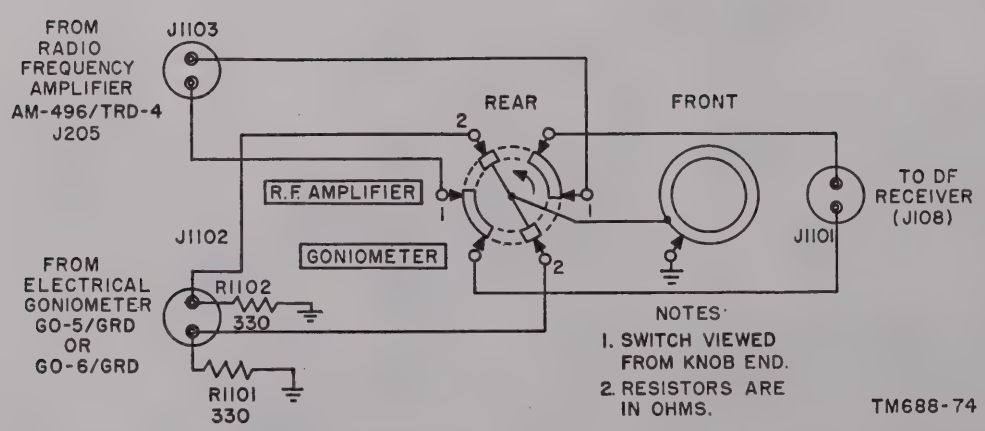

Figure 127. Radio Frequency Transmission Line Switch SA-346/GRD, complete schematic diagram.

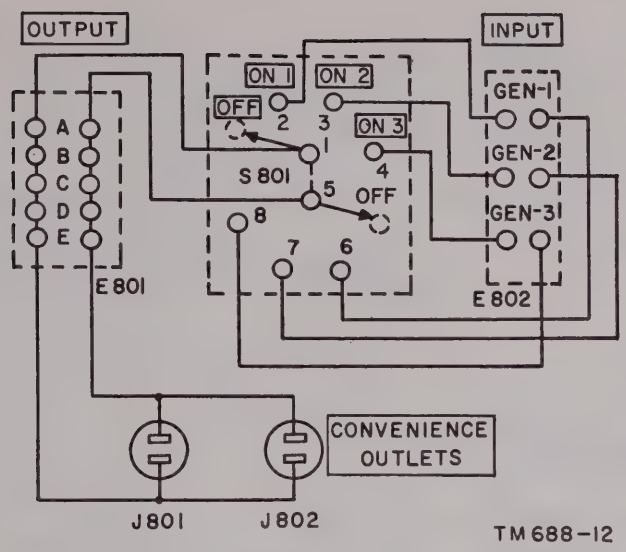

Figure 128. Switch Box SA-345/U, complete schematic diagram.

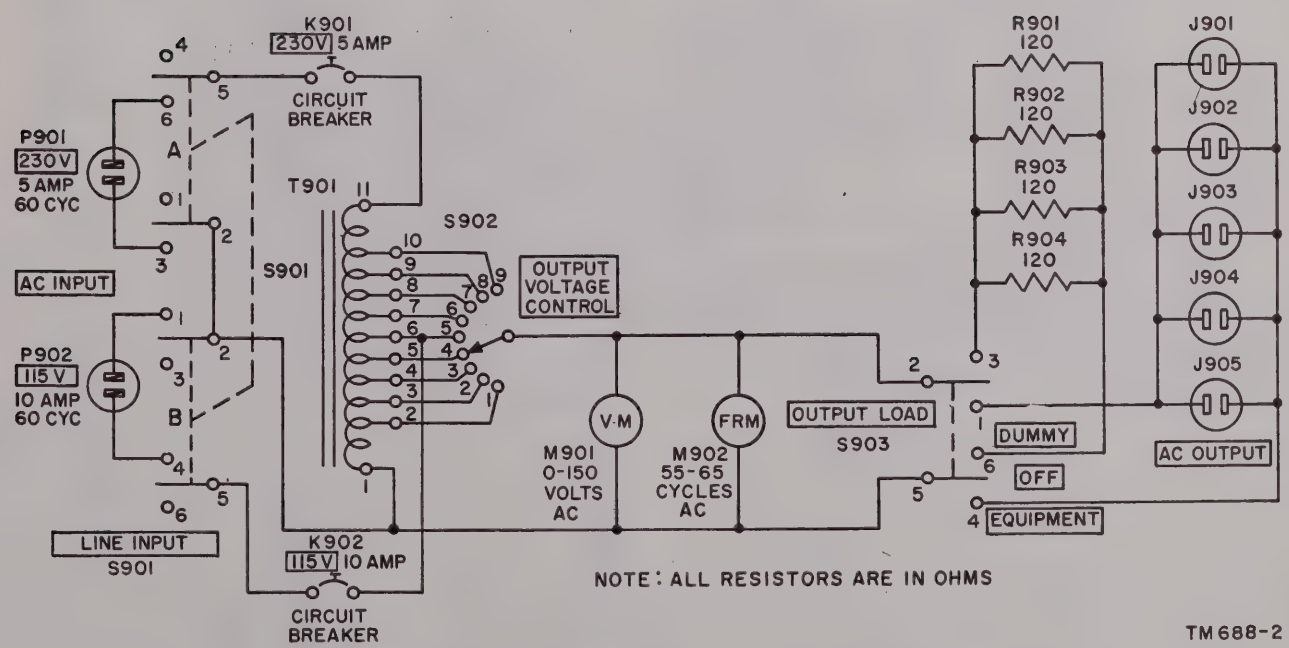

Figure 129. Junction Box J-95B/CRD-2, complete schematic diagram.

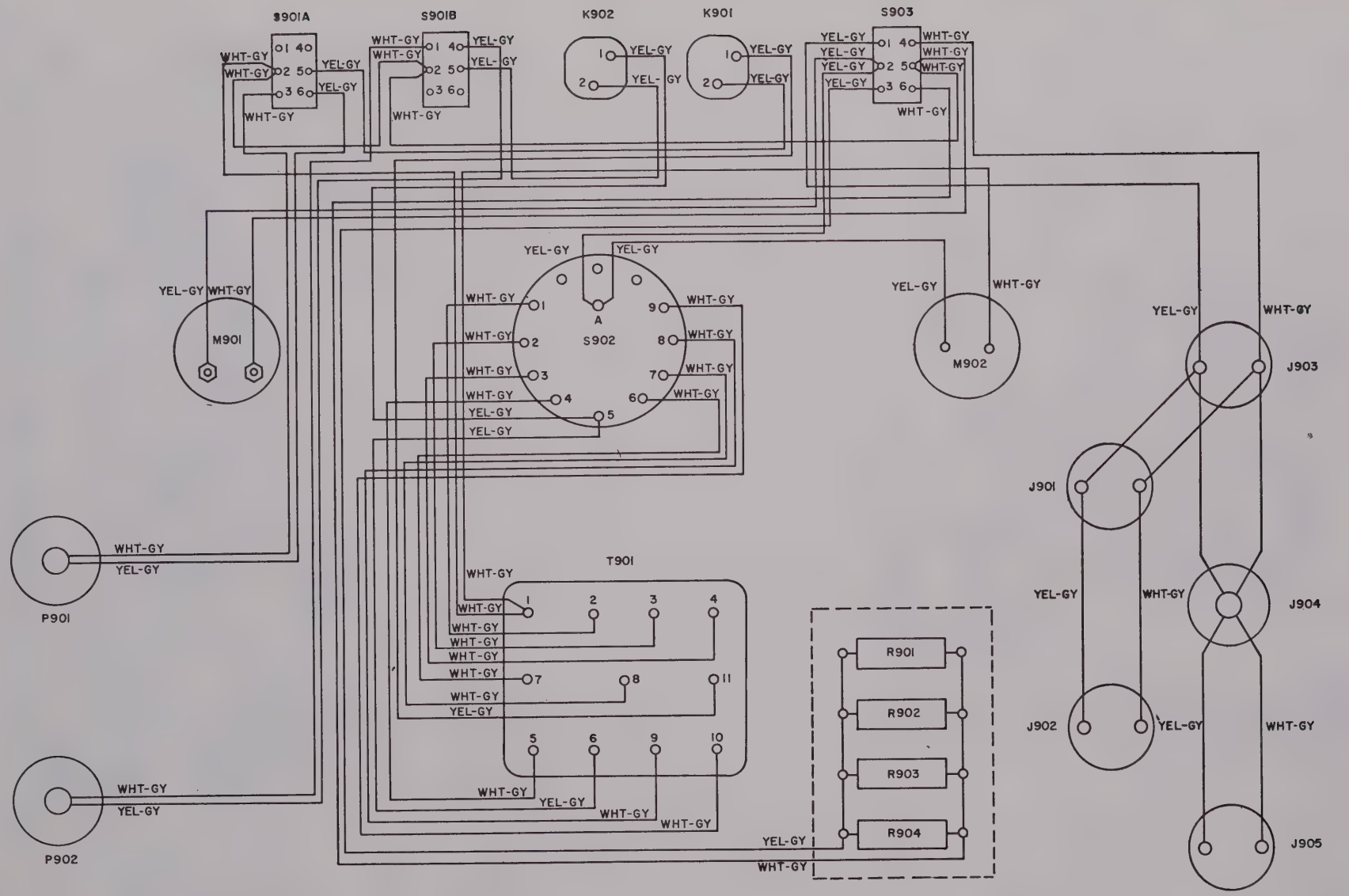

Figure 130. Junction Box J-95B/CRD-2, wiring diagram.

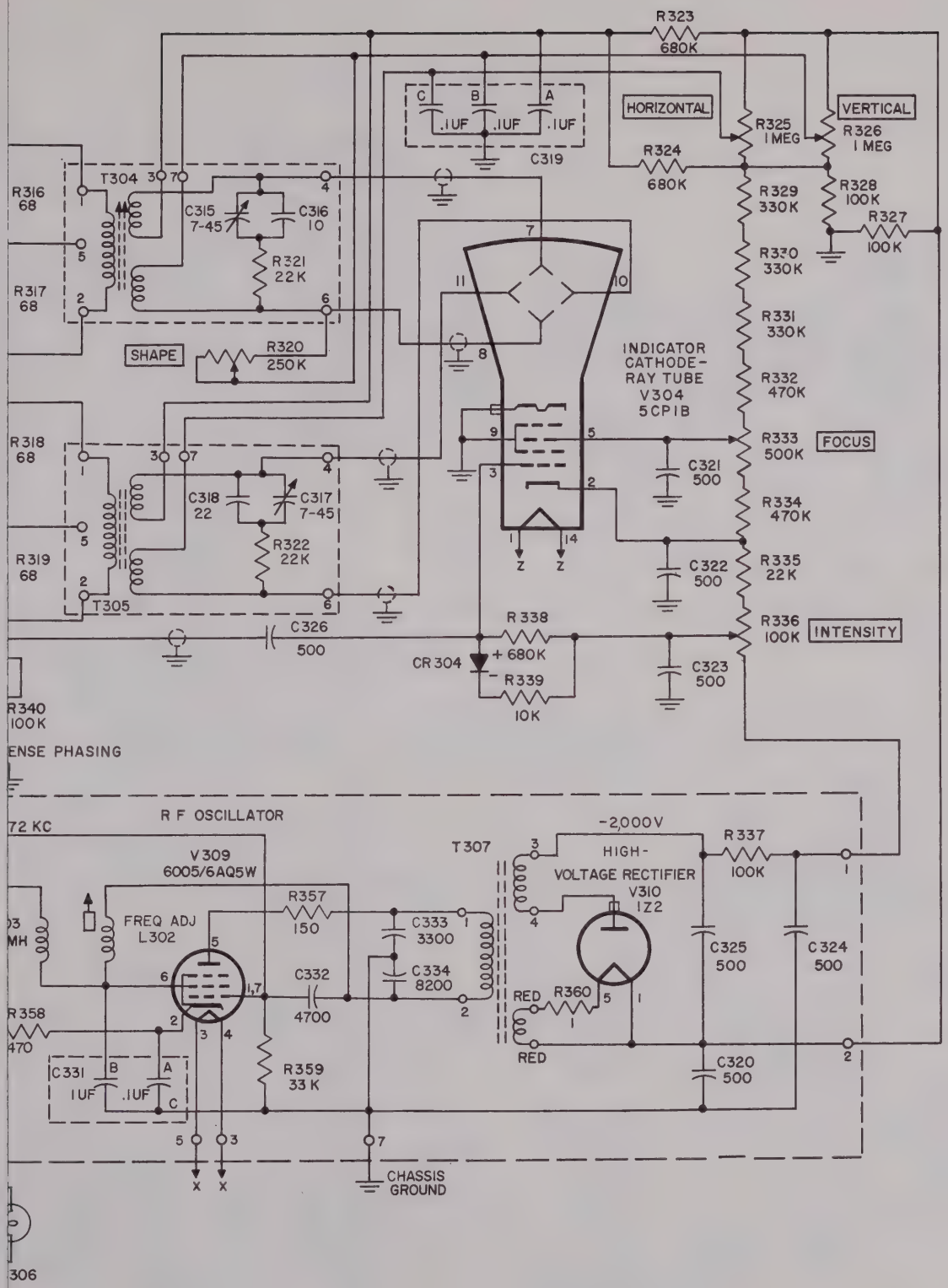
R323
680K
HORIZONTAL
VERTICAL
R325
1 MEG
R326
1 MEG
R324
680K
C319
.1UF
.1UF
.1UF
R328
100K
R327
100K
R329
330K
R330
330K
R331
330K
R332
470K
R333
500K
FOCUS
R334
470K
R335
22K
R336
100K
INTENSITY
R316
68
R317
68
T304
C315
7-45
C316
10
R321
22K
SHAPE
R320
250K
INDICATOR
CATHODE-
RAY TUBE
V304
5CP1B
C321
500
C322
500
C323
500
R318
68
R319
68
T305
C318
22
C317
7-45
R322
22K
C326
500
R338
680K
CR304
R339
10K
R340
100K
ENSE PHASING
R F OSCILLATOR
72 KC
V309
6005/6AQ5W
FREQ ADJ
L302
R357
150
C332
4700
R358
470
C331
1UF
.1UF
R359
33K
CHASSIS
GROUND
T307
-2,000V
HIGH-
VOLTAGE RECTIFIER
V310
1Z2
C333
3300
C334
8200
R360
R337
100K
C325
500
C324
500
C320
500
306

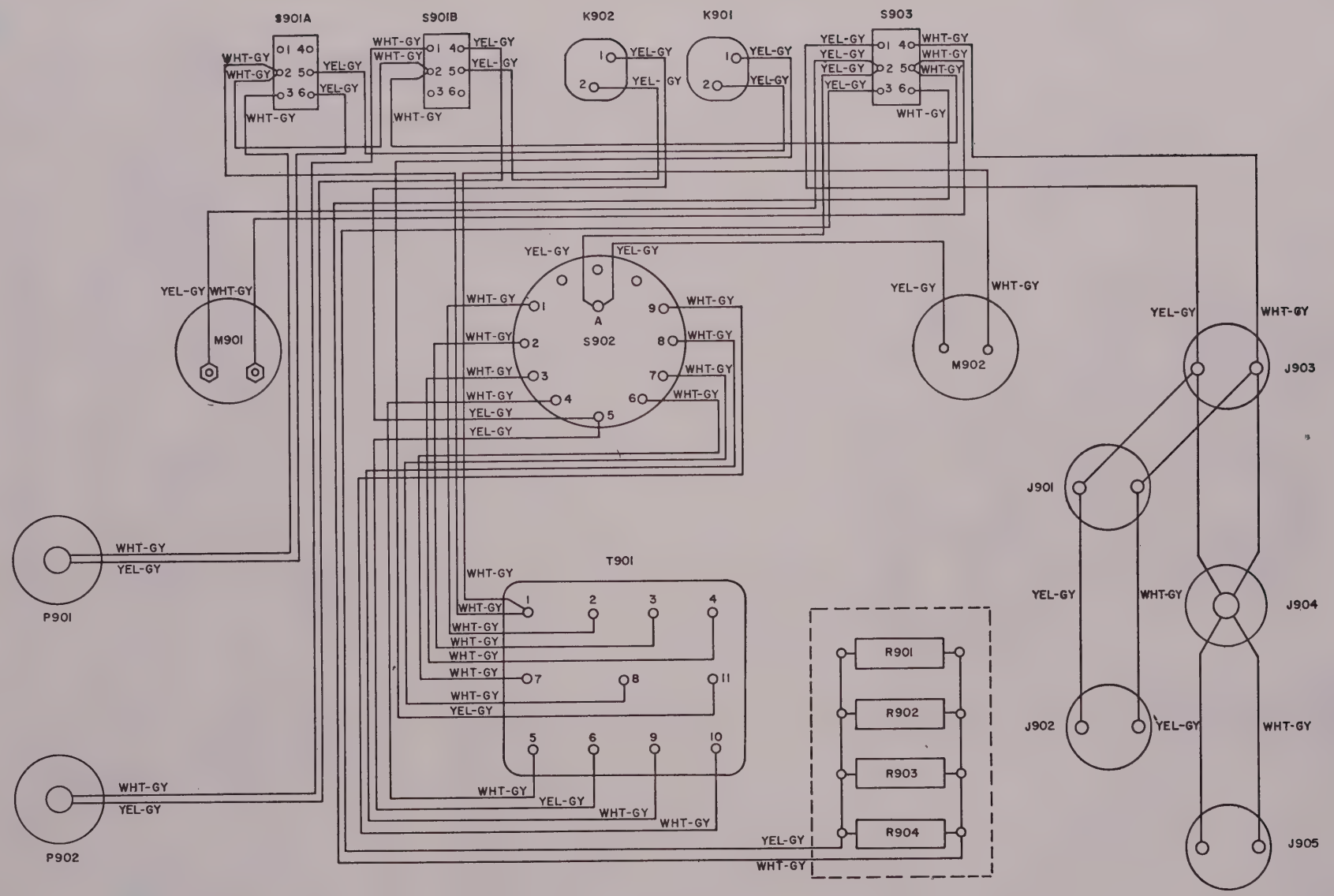

Figure 130. Junction Box J–95B/CRD–2, wiring diagram.

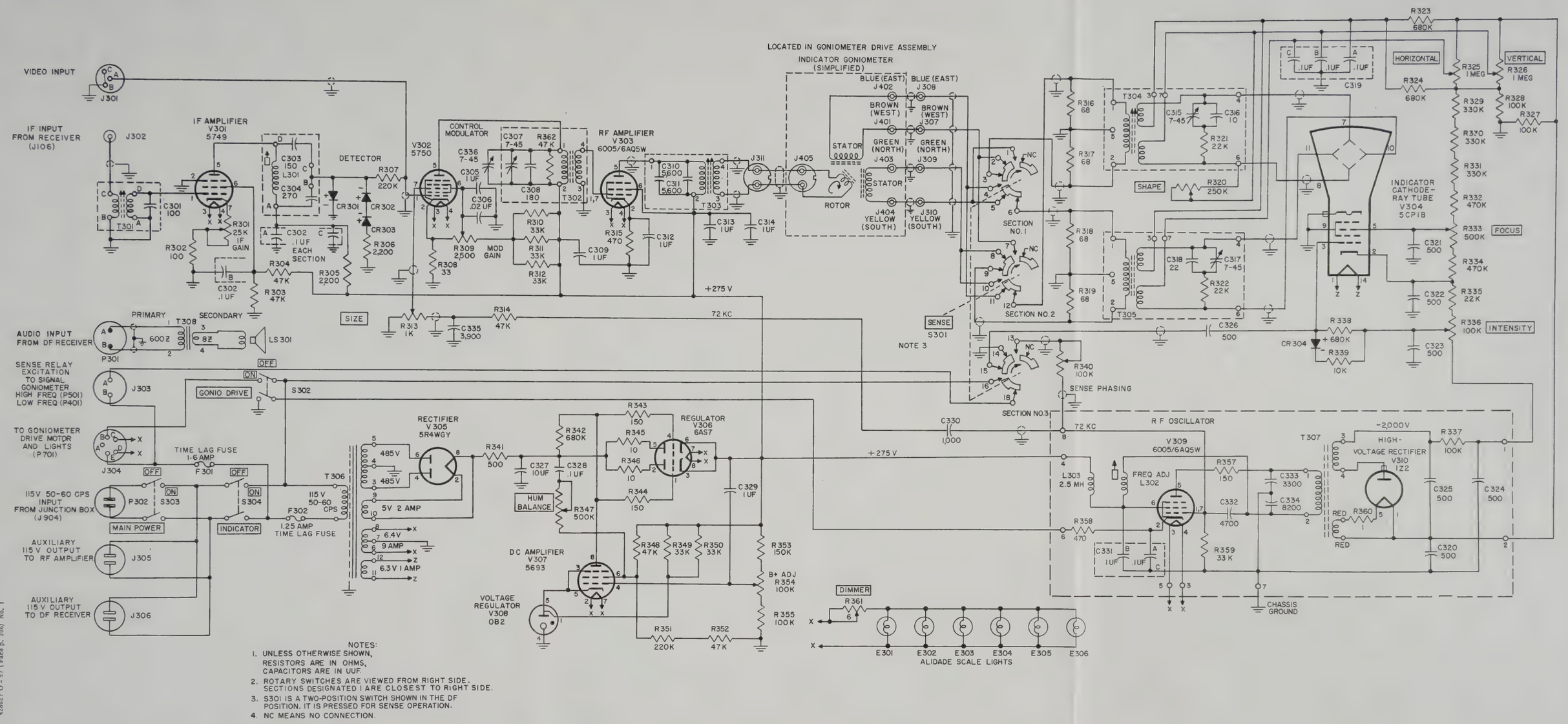

NOTES:

1. UNLESS OTHERWISE SHOWN, RESISTORS ARE IN OHMS, CAPACITORS ARE IN UUF.
2. ROTARY SWITCHES ARE VIEWED FROM RIGHT SIDE. SECTIONS DESIGNATED 1 ARE CLOSEST TO RIGHT SIDE.
3. S301 IS A TWO-POSITION SWITCH SHOWN IN THE DF POSITION. IT IS PRESSED FOR SENSE OPERATION.
4. NC MEANS NO CONNECTION.

Figure 131. Azimuth Indicator IP-137/GRD, complete schematic diagram.

428027 O - 57 (Face p. 206) No. 1

Item	Zone	
C301 Capacitor	In T301 assembly	R3
C302 Capacitor	A3, B3	R3
C303 Capacitor	In L301 assembly	R3
C304 Capacitor	In L301 assembly	R3
C305 Capacitor	A4	R3
C306 Capacitor	C4	R3
C307 Capacitor	On top of T302	R3
C308 Capacitor	In T302 assembly	R3
C309 Capacitor	B5	R3
C310 Capacitor	In T303 assembly	R3
C311 Capacitor	In T303 assembly	R3
C312 Capacitor	A4	R3
C313 Capacitor	A4	R3
C314 Capacitor	A4	R3
C315 Capacitor	In T304 assembly	R3
C316 Capacitor	In T304 assembly	R3
C317 Capacitor	In T305 assembly	R3
C318 Capacitor	In T305 assembly	R3
C319 Capacitor	B5	R3
C320 Capacitor	B10, C10	F3
C321 Capacitor	E3, E4	[illegible]
C222 Capacitor	E3, E4	F3
C323 Capacitor	C6	[illegible]
C324 Capacitor	B10, C10	G3
C325 Capacitor	B10	[illegible]
C326 Capacitor	C5	J3
C327 Capacitor	C6	J3
C328 Capacitor	C4	J3
C329 Capacitor	E5	J3
C330 Capacitor	C2	J3
C331 Capacitor	C9, D9	J3
C332 Capacitor	B9	J3
C333 Capacitor	B10	J3
C334 Capacitor	B10	J3
C335 Capacitor	C2	J3
CR301 Crystal rectifier.	C3	J3 L3
CR302 Crystal rectifier.	C3	L3 L3
CR303 Crystal rectifier.	C3	LS [illegible]
CR304 Crystal rectifier.	C5	P3 [illegible]
E301 Lamp	E2	P3
E302 Lamp	E1	[illegible]
E303 Lamp	E1	R3
E304 Lamp	E1	R3
E305 Lamp	E1	R3
E306 Lamp	E1	R3
R337 Resistor	B10, C10	R3
R338 Resistor	C6	R3
R339 Resistor	C5, C6	R3
R340 Resistor	B2	R3
R341 Resistor	D6	R3

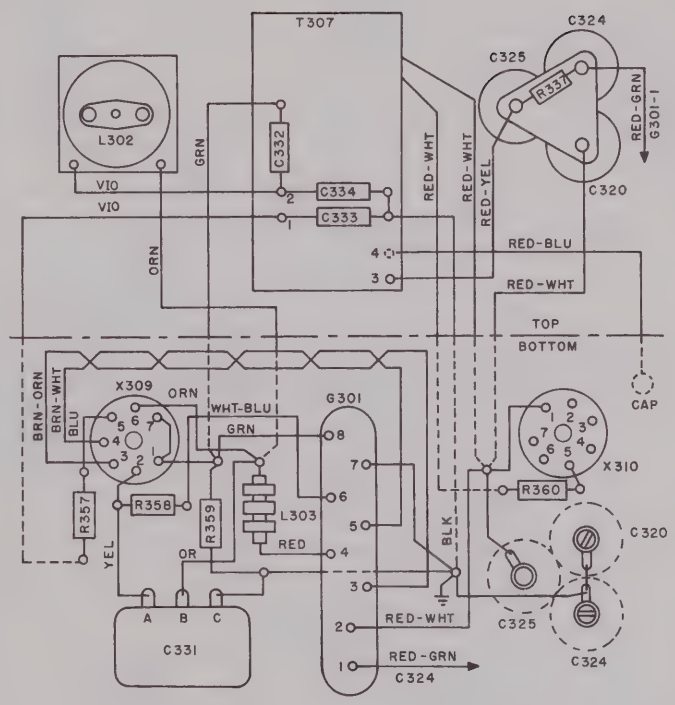

TM688-119

Key to Figure 132

Item	Zone	Item	Zone	Item	Zone
C301 Capacitor	In T301 assembly	R342 Resistor	C4	R310 Resistor	C4
C302 Capacitor	A3, B3	R343 Resistor	C4	R311 Resistor	C4
C303 Capacitor	In L301 assembly	R344 Resistor	C4	R312 Resistor	C4
C304 Capacitor	In L301 assembly	R345 Resistor	C5	R313 Resistor	B2
C305 Capacitor	A4	R346 Resistor	C5	R314 Resistor	C2
C306 Capacitor	C4	R347 Resistor	C5, C6	R315 Resistor	C3
C307 Capacitor	On top of T302	R348 Resistor	C5	R316 Resistor	A6
C308 Capacitor	In T302 assembly	R349 Resistor	C4	R317 Resistor	A6
C309 Capacitor	B5	R350 Resistor	C4	R318 Resistor	B6
C310 Capacitor	In T303 assembly	R351 Resistor	C5	R319 Resistor	B6
C311 Capacitor	In T303 assembly	R352 Resistor	C5	R320 Resistor	A5
C312 Capacitor	A4	R353 Resistor	C5	R321 Resistor	In T304 assembly.
C313 Capacitor	A4	R354 Resistor	D5	R322 Resistor	In T305 assembly.
C314 Capacitor	A4	R355 Resistor	C5	R323 Resistor	C3
C315 Capacitor	In T304 assembly	R357 Resistor	C9	R324 Resistor	C2
C316 Capacitor	In T304 assembly	R358 Resistor	C9	R325 Resistor	D3
C317 Capacitor	In T305 assembly	R359 Resistor	C9	R326 Resistor	C3
C318 Capacitor	In T305 assembly	R360 Resistor	C10	R327 Resistor	C3
C319 Capacitor	B5	R361 Resistor	B2	R328 Resistor	C2
C320 Capacitor	B10, C10	F301 Fuse (cartridge).	E1	R329 Resistor	C2
C321 Capacitor	E3, E4	F302 Fuse (cartridge).	E1	R330 Resistor	D2
C322 Capacitor	E3, E4	G301 Power Supply.	D3, C10	R331 Resistor	D2
C323 Capacitor	C6	J301 Receptacle	C7	R332 Resistor	D2
C324 Capacitor	B10, C10	J302 Receptacle	C7	R333 Resistor	D3
C325 Capacitor	B10	J303 Receptacle	E7	R334 Resistor	D2
C326 Capacitor	C5	J304 Receptacle	C7	R335 Resistor	D2
C327 Capacitor	C6	J305 Receptacle	B7	R336 Resistor	D2, C2
C328 Capacitor	C4	J306 Receptacle	A7	R362 Resistor	In T302 assembly.
C329 Capacitor	E5	J307 Receptacle	A6	S301 Switch	B1, C, D1
C330 Capacitor	C2	J308 Receptacle	A6	S302 Switch	C2
C331 Capacitor	C9, D9	J309 Receptacle	B6	S303 Switch	D2
C332 Capacitor	B9	J310 Receptacle	B6	S304 Switch	A2
C333 Capacitor	B10	J311 Receptacle	A6	T301 Transformer	A4
C334 Capacitor	B10	L301 Coil	B3	T302 Transformer	B5
C335 Capacitor	C2	L302 Coil	B9	T303 Transformer	A5
CR301 Crystal rectifier.	C3	L303 Choke	C9	T304 Transformer	A6
CR302 Crystal rectifier.	C3	LS301 Loudspeaker.	A1	T305 Transformer	B6
CR303 Crystal rectifier.	C3	P301 Plug (connector).	D7	T306 Transformer	D6
CR304 Crystal rectifier.	C5	P302 Plug (connector).	B7	T307 Transformer	A10, B10
E301 Lamp	E2	R301 Resistor	A3	T308 Transformer	A3
E302 Lamp	E1	R302 Resistor	A3	X301 Tube socket	A3
E303 Lamp	E1	R303 Resistor	C3	X302 Tube socket	B4
E304 Lamp	E1	R304 Resistor	C3	X303 Tube socket	A4
E305 Lamp	E1	R305 Resistor	C3	X304 Tube socket	C8
E306 Lamp	E1	R306 Resistor	C3	X305 Tube socket	E5
R337 Resistor	B10, C10	R307 Resistor	C3	X306 Tube socket	C5
R338 Resistor	C6	R308 Resistor	C3, C4	X307 Tube socket	D5
R339 Resistor	C5, C6	R309 Resistor	B3	X308 Tube socket	C4
R340 Resistor	B2			X309 Tube socket	C9
R341 Resistor	D6			X310 Tube socket	C10

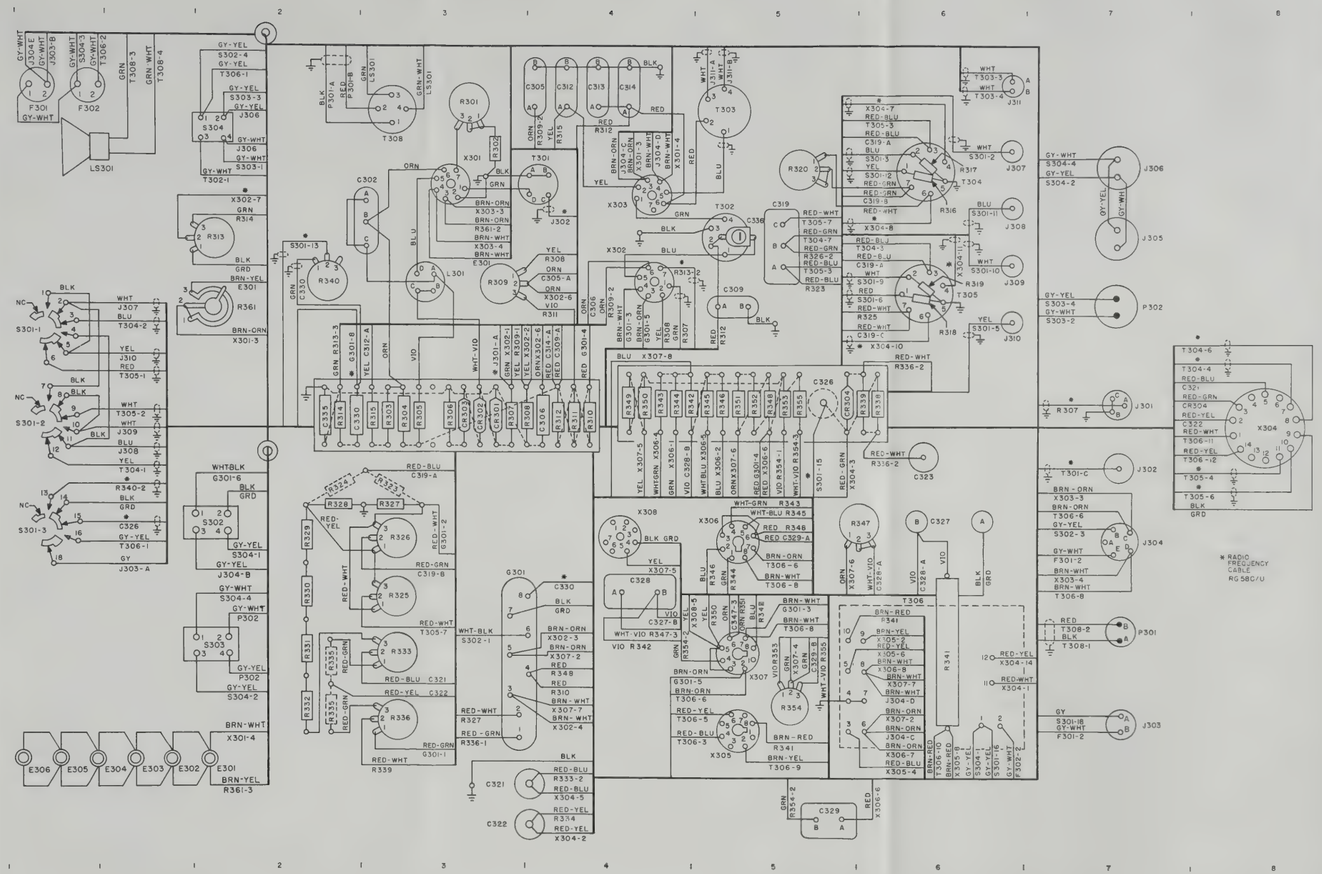

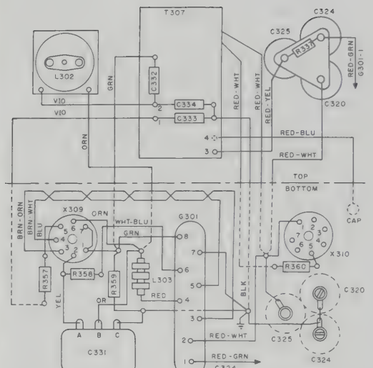

Figure 132. Azimuth Indicator IP-137/GRD, wiring diagram.

TM688-119

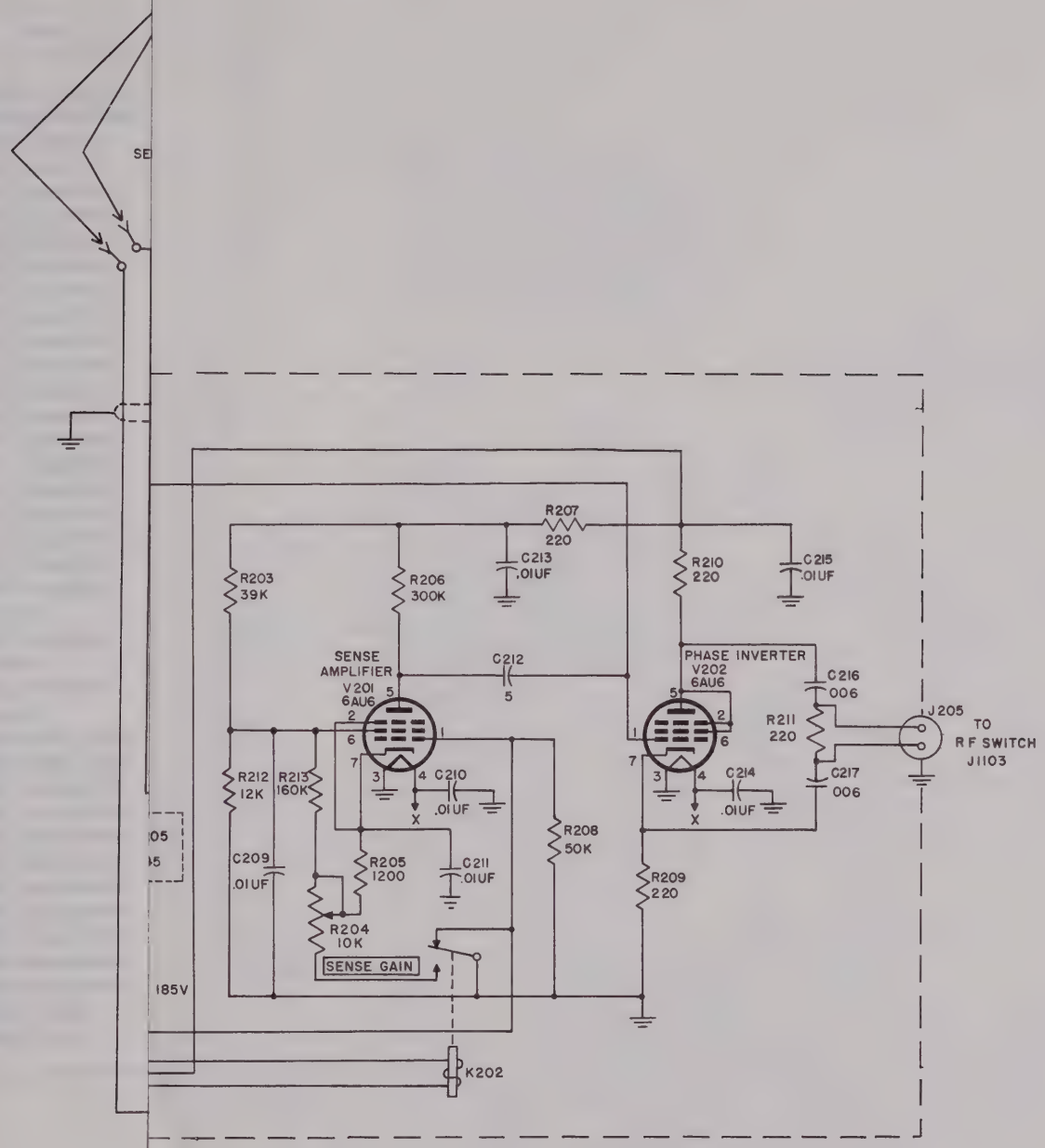

NOTES:

1. UNLESS OTHERWISE SHOWN RESISTORS ARE IN OHMS CAPACITORS ARE IN UUF.
2. ROTARY SWITCHES VIEWED FROM KNOB OR DRIVE. SECTIONS DESIGNATED NO.1 ARE CLOSEST TO KNOB OR DRIVE.

428027 O - 57 (Face p. 206) No. 3

TM688-91

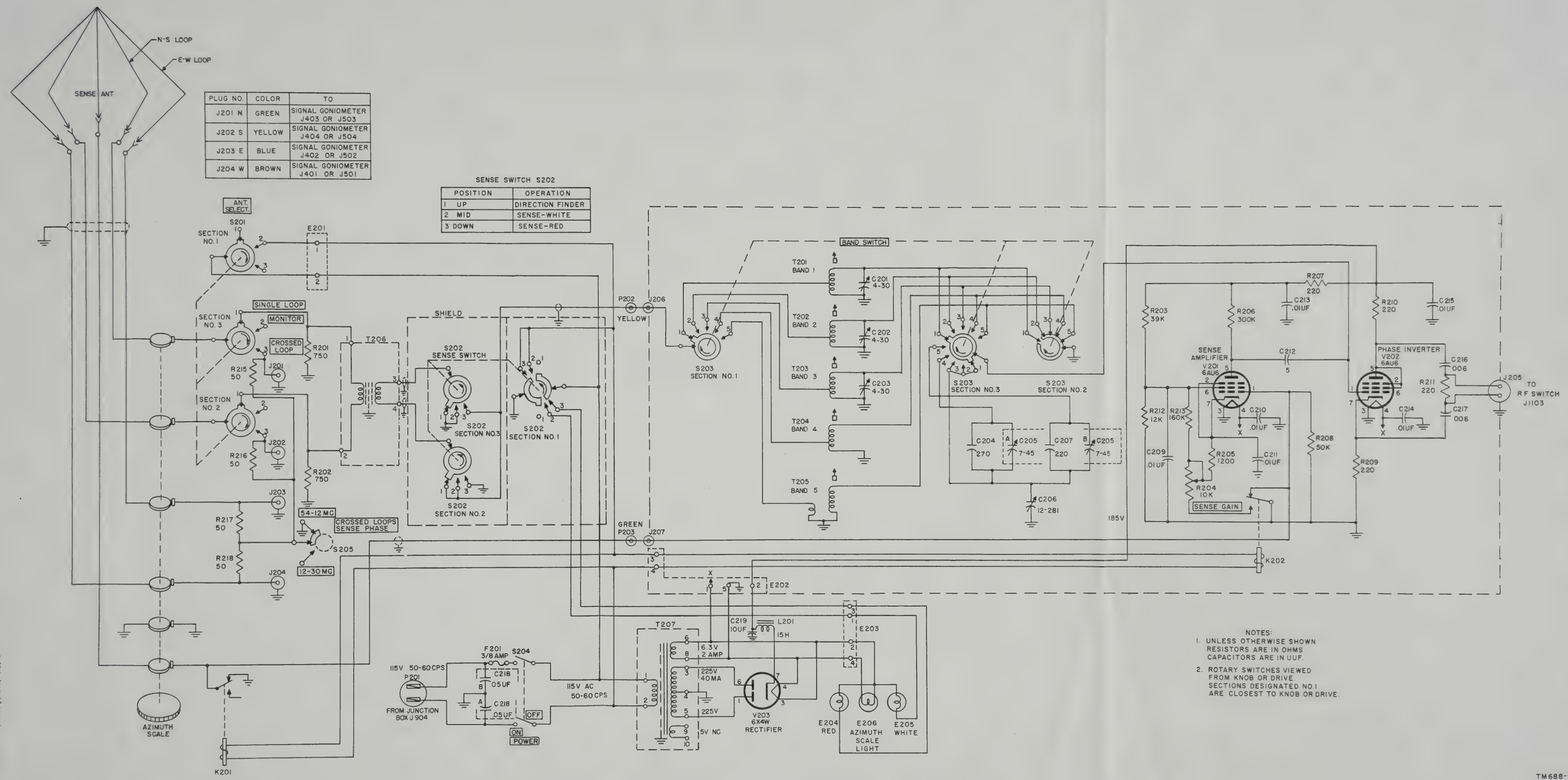

SENSE SWITCH S202

POSITION	OPERATION
1 UP	DIRECTION FINDER
2 MID	SENSE-WHITE
3 DOWN	SENSE-RED

PLUG NO.	COLOR	TO
J201 N	GREEN	SIGNAL GONIOMETER J403 OR J503
J202 S	YELLOW	SIGNAL GONIOMETER J404 OR J504
J203 E	BLUE	SIGNAL GONIOMETER J402 OR J502
J204 W	BROWN	SIGNAL GONIOMETER J401 OR J501

NOTES:
1. UNLESS OTHERWISE SHOWN RESISTORS ARE IN OHMS CAPACITORS ARE IN UUF.
2. ROTARY SWITCHES VIEWED FROM KNOB OR DRIVE. SECTIONS DESIGNATED NO. 1 ARE CLOSEST TO KNOB OR DRIVE.

Figure 133. Radio Frequency Amplifier AM-496/TRD-4, complete schematic diagram.

TM688-91

428027 O - 57 (Face p. 206) No. 3

Item	Zone
E222 Brush, contact	B8
F223 Brush, contact	B9
C201 Capacitor	E5
C202 Capacitor	D5
C203 Capacitor	D5
C204 Capacitor	C5
C205 Capacitor	C5
C206 Capacitor	D2, D3
C207 Capacitor	C5
C209 Capacitor	E3
C210 Capacitor	E1
C211 Capacitor	E3
C212 Capacitor	D3
C213 Capacitor	E1
C214 Capacitor	C2
C215 Capacitor	C2
C216 Capacitor	C3
C217 Capacitor	C3
C218 Capacitor	B3
C219 Capacitor	B4
E201 Terminal board.	C6
E202 Terminal board.	D1
E203 Terminal board.	A1
E204 Lamp, pilot	B1
E205 Lamp, pilot	A1
E206 Lamp, pilot	B1
F201 Fuse, power	B4
J201 Receptacle	C8
J202 Receptacle	C8
J203 Receptacle	C8
J204 Receptacle	C9
J205 Receptacle	C3
J206 Receptacle	E4, E5
J207 Receptacle	E3, D3
K201 Relay	A8
K202 Relay	E4

428027 O - 57 (Face p. 206) No. 4

Key to Figure 134

Item	Zone	Item	Zone
E222 Brush, contact	B8	L201 Reactor	B2
F223 Brush, contact	B9	P201 Plug, connector.	B3
C201 Capacitor	E5	P202 Plug, connector.	B5
C202 Capacitor	D5	P203 Plug, connector.	B7
C203 Capacitor	D5	R201 Resistor	A9
C204 Capacitor	C5	R202 Resistor	A9
C205 Capacitor	C5	R203 Resistor	E2
C206 Capacitor	D2, D3	R204 Resistor	D3
C207 Capacitor	C5	R205 Resistor	E3
C209 Capacitor	E3	R206 Resistor	E2
C210 Capacitor	E1	R207 Resistor	E1
C211 Capacitor	E3	R208 Resistor	E4
C212 Capacitor	D3	R209 Resistor	C2
C213 Capacitor	E1	R210 Resistor	C2
C214 Capacitor	C2	R211 Resistor	C4
C215 Capacitor	C2	R212 Resistor	D3
C216 Capacitor	C3	R213 Resistor	E3
C217 Capacitor	C3	R215 Resistor	D8
C218 Capacitor	B3	R216 Resistor	D8
C219 Capacitor	B4	R217 Resistor	D8
E201 Terminal board.	C6	R218 Resistor	D9
E202 Terminal board.	D1	S201 Switch	B7
E203 Terminal board.	A1	S202 Switch	A6, B6
E204 Lamp, pilot	B1	S203 Switch	C3, C4, C5
E205 Lamp, pilot	A1		
E206 Lamp, pilot	B1	S204 Switch	A7
F201 Fuse, power	B4	T201 Transformer	E6
J201 Receptacle	C8	T202 Transformer	D6
J202 Receptacle	C8	T203 Transformer	D6
J203 Receptacle	C8	T204 Transformer	C6
J204 Receptacle	C9	T205 Transformer	C6
J205 Receptacle	C3	T206 Transformer	A9
J206 Receptacle	E4, E5	T207 Transformer	A3, B3
J207 Receptacle	E3, D3	X201 Tube socket	E3
K201 Relay	A8	X202 Tube socket	C3
K202 Relay	E4	X203 Tube socket	A4

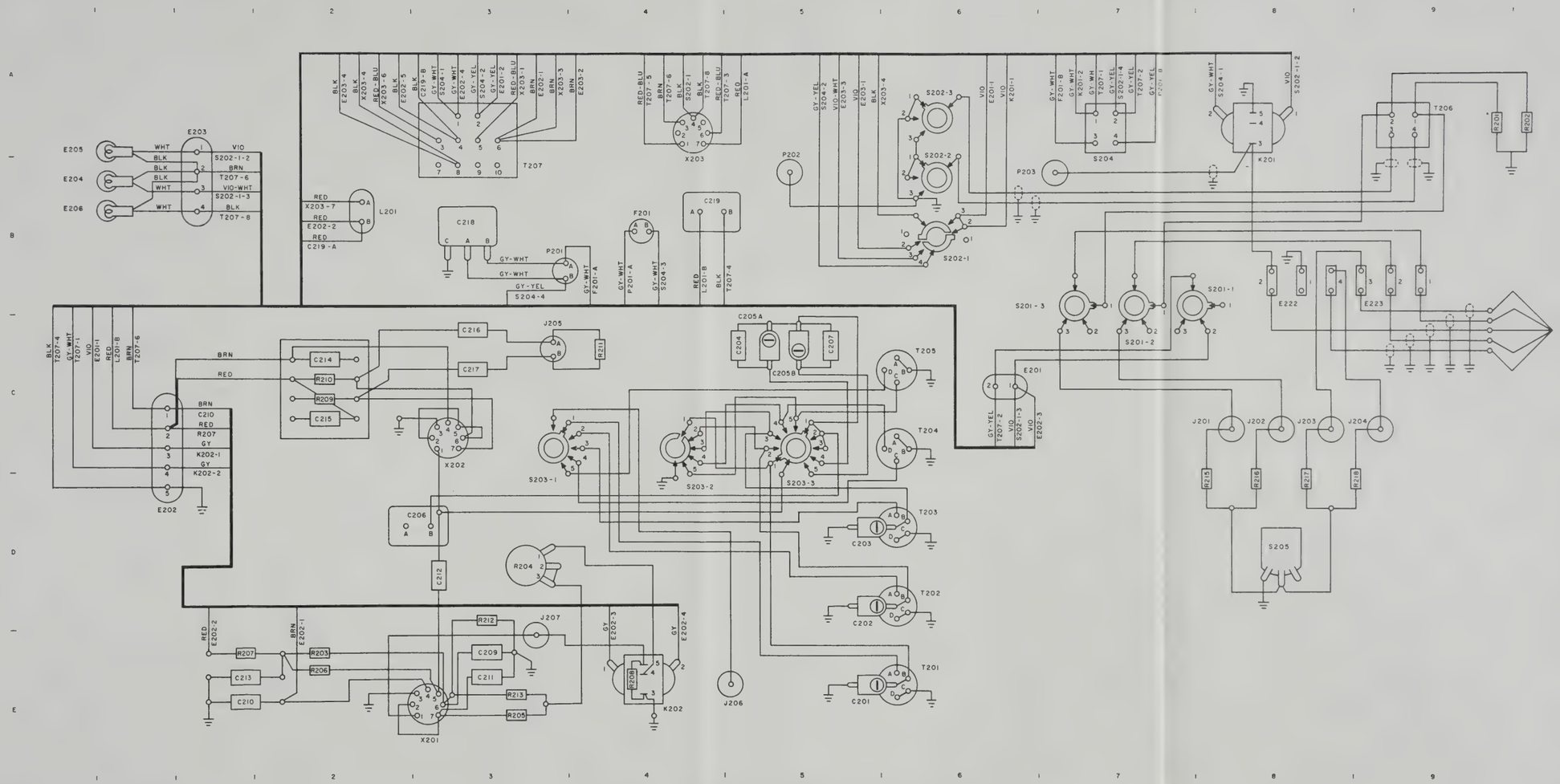

Figure 134. Radio Frequency Amplifier AM-496/TRD-4, wiring diagram.

TM698-145

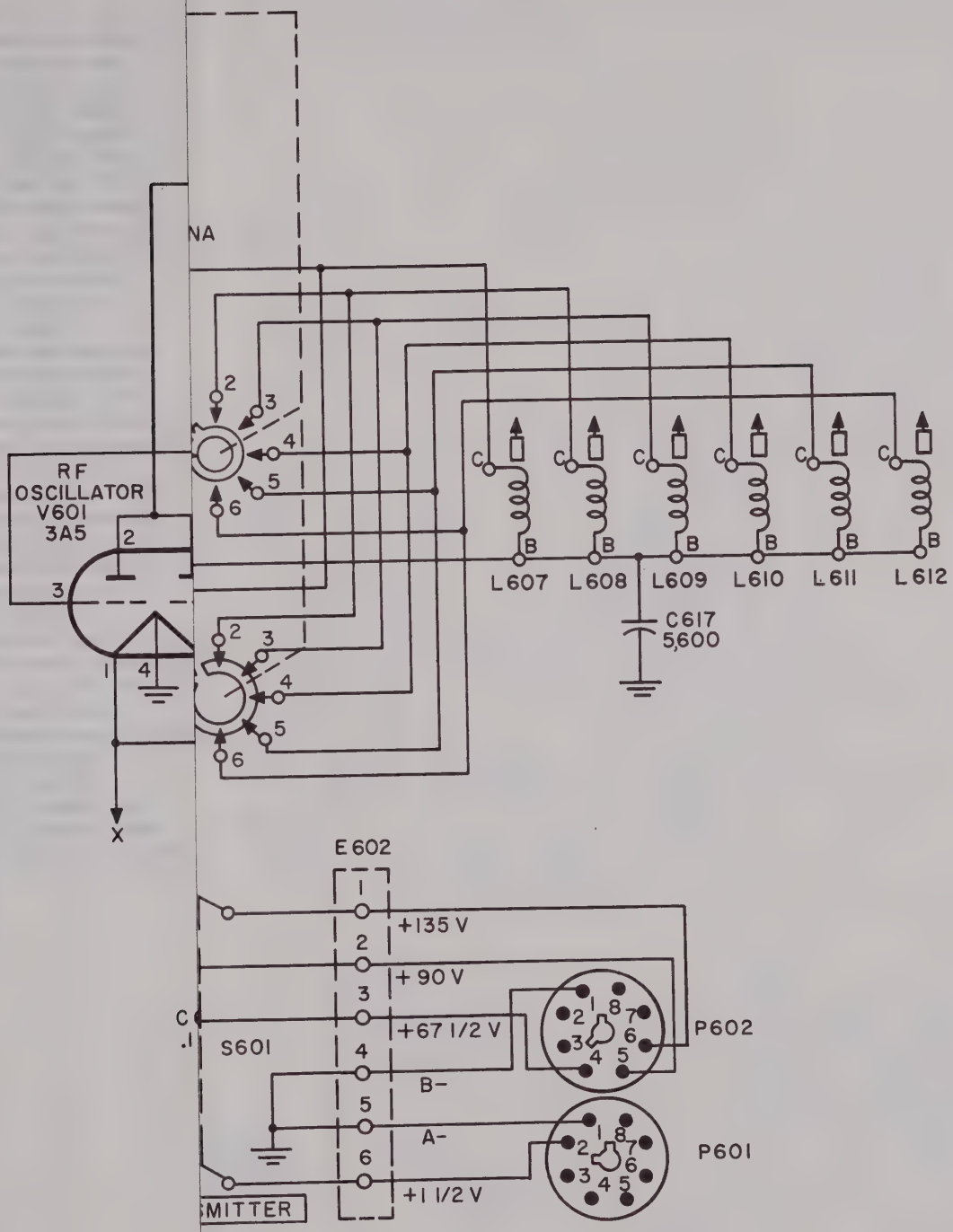

OB END
TO THE KNOB

TM688-9

428027 O - 57 (Face p. 206) No. 5

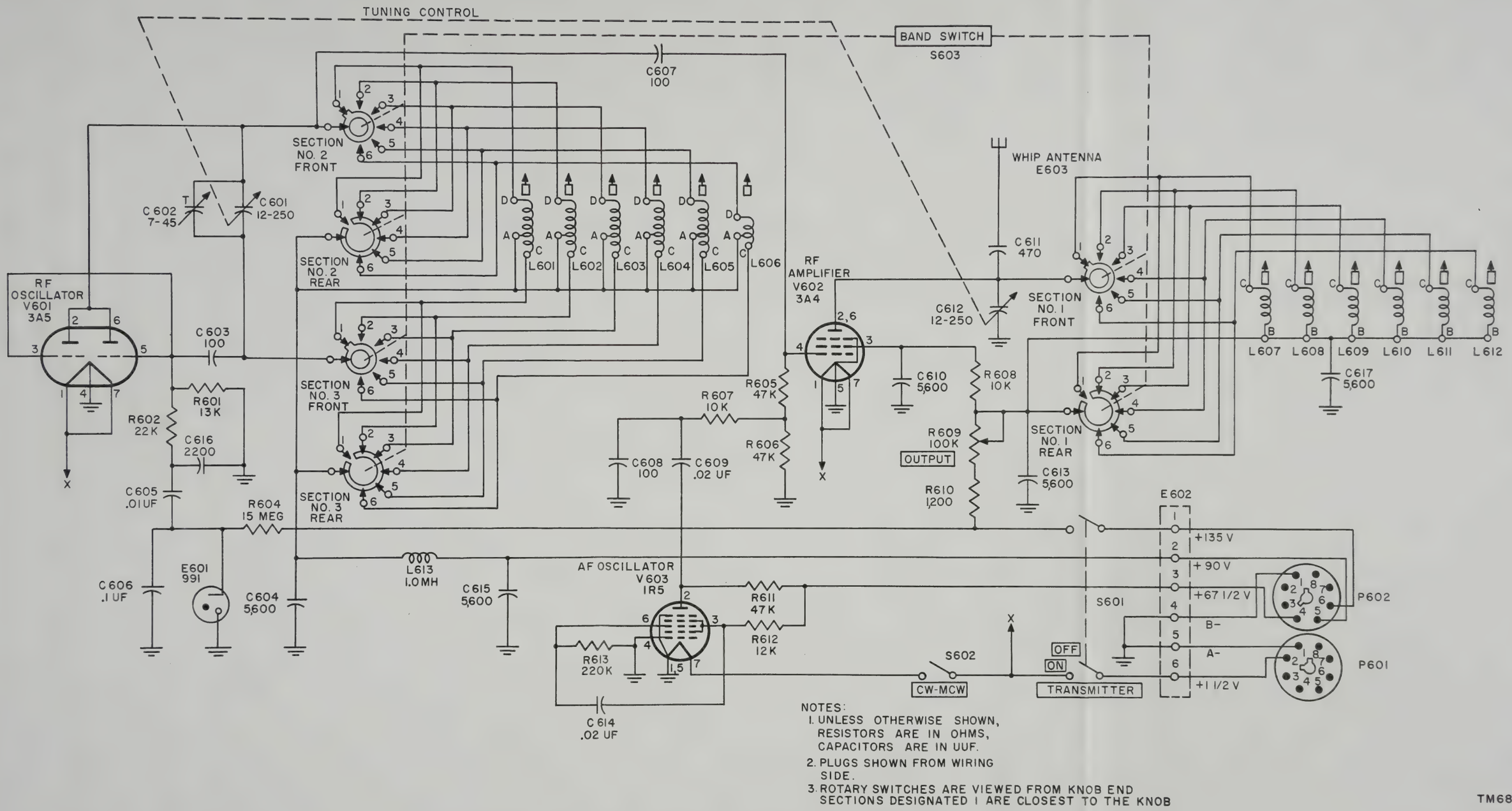

NOTES:
1. UNLESS OTHERWISE SHOWN, RESISTORS ARE IN OHMS, CAPACITORS ARE IN UUF.
2. PLUGS SHOWN FROM WIRING SIDE.
3. ROTARY SWITCHES ARE VIEWED FROM KNOB END SECTIONS DESIGNATED 1 ARE CLOSEST TO THE KNOB

TM688-9

Figure 135. Radio Transmitter T-279/UR, complete schematic diagram.

428027 O - 57 (Face p. 206) No. 5

1 Terminal stud, loop (4), (E214)
2 Terminal stud, sense (E215)
3 Loop antenna plate
4 Banana plug, sense (P204)
5 Banana plug, loop (4), (P205)
6 Lead-in plate assembly
7 Rubber gasket, O ring (O 210)
8 Upper shaft and shield assembly
9 Internal shield assembly
10 Clipper seal, bearing (O 209)
11 Bearing, housing (O 208)
12 Main upper housing
13 Upper collars (2)
14 Lower collars (2)
15 Support post assembly
16 Upper bearing spacer
17 Upper bearing (O 207)
18 Retainer, upper bearing (2)
19 Contact ring insulator (6)
20 Grounding washer (6)
21 Contact ring (6), (E216)
22 Contact ring spacer (6)
23 Contact brush assembly (selector switch)
24 Contact brush assembly (sense antenna)
25 Retainer, slip ring
26 Main lower tube
27 Rf amplifier case assembly
28 Selector switch assembly (S201)
29 Right angle drive gear (2), (O 212)
30 Upper guide ring
31 Compression spring (O 216)
32 Retainer, spring
33 Clamp assembly
34 Locking handle (H208)
35 Terminal board (E203)
36 Upper panel subassembly
37 T205
38 T204
39 T203
40 T202

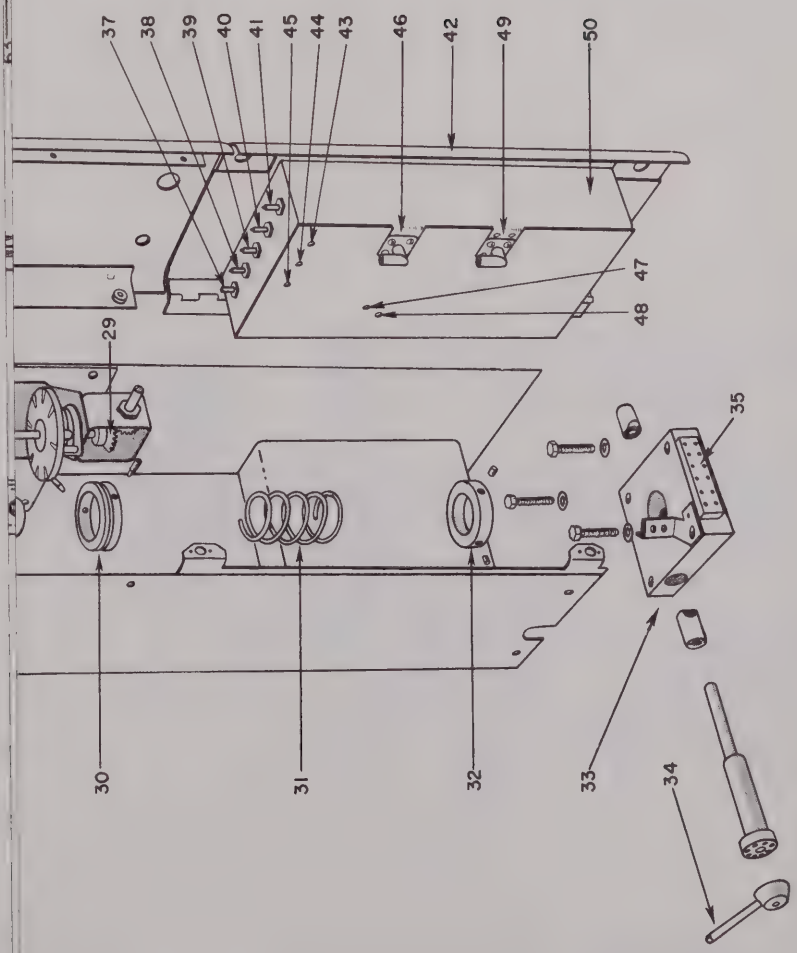

TM688-11

1 Terminal stud, loop (4), (E214)
2 Terminal stud, sense (E215)
3 Loop antenna plate
4 Banana plug, sense (P204)
5 Banana plug, loop (4), (P205)
6 Lead-in plate assembly
7 Rubber gasket, O ring (O 210)
8 Upper shaft and shield assembly
9 Internal shield assembly
10 Clipper seal, bearing (O 209)
11 Bearing, housing (O 208)
12 Main upper housing
13 Upper collars (2)
14 Lower collars (2)
15 Support post assembly
16 Upper bearing spacer
17 Upper bearing (O 207)
18 Retainer, upper bearing (2)
19 Contact ring insulator (6)
20 Grounding washer (6)
21 Contact ring (6), (E216)
22 Contact ring spacer (6)
23 Contact brush assembly (selector switch) (E223)
24 Contact brush assembly (sense antenna) (E222).
25 Retainer, slip ring
26 Main lower tube
27 Rf amplifier case assembly
28 Selector switch assembly (S201)
29 Right angle drive gear (2), (O 212)
30 Upper guide ring
31 Compression spring (O 216)
32 Retainer, spring
33 Clamp assembly
34 Locking handle (H208)
35 Terminal board (E203)
36 Upper panel subassembly
37 T205
38 T204
39 T203
40 T202
41 T201
42 Cover and hinge assembly
43 C201
44 C202
45 C203
46 Balance transformer connector (J206)
47 C205B
48 C205A
49 Sense switch connector (J207)
50 Rf amplifier tuning assembly
51 Lower bearing (O 206)
52 Main lower deck
53 Main lower casting
54 Bottom bracket
55 White sense light (E205)
56 Azimuth scale light (E206)
57 Red sense light (E204)
58 Dial window (H210)
59 Dial door assembly
60 Thumbscrew (H209)
61 Retainer, lower bearing
62 Clamping bar washer
63 Azimuth dial
64 Dial index pin
65 Index pin spring (O 215)
66 Spring retaining screw
67 Lower adjusting screw
68 Switch plate washer
69 Switch plate spacer
70 Sense switch plate
71 Hub extension
72 Rf amplifier hand wheel
73 Pull tube plug
74 Pull tube
75 Clamping bar
76 Handwheel shaft
77 Lower guide ring
78 Handwheel knob
79 Bushing, knob
80 Washer, knob

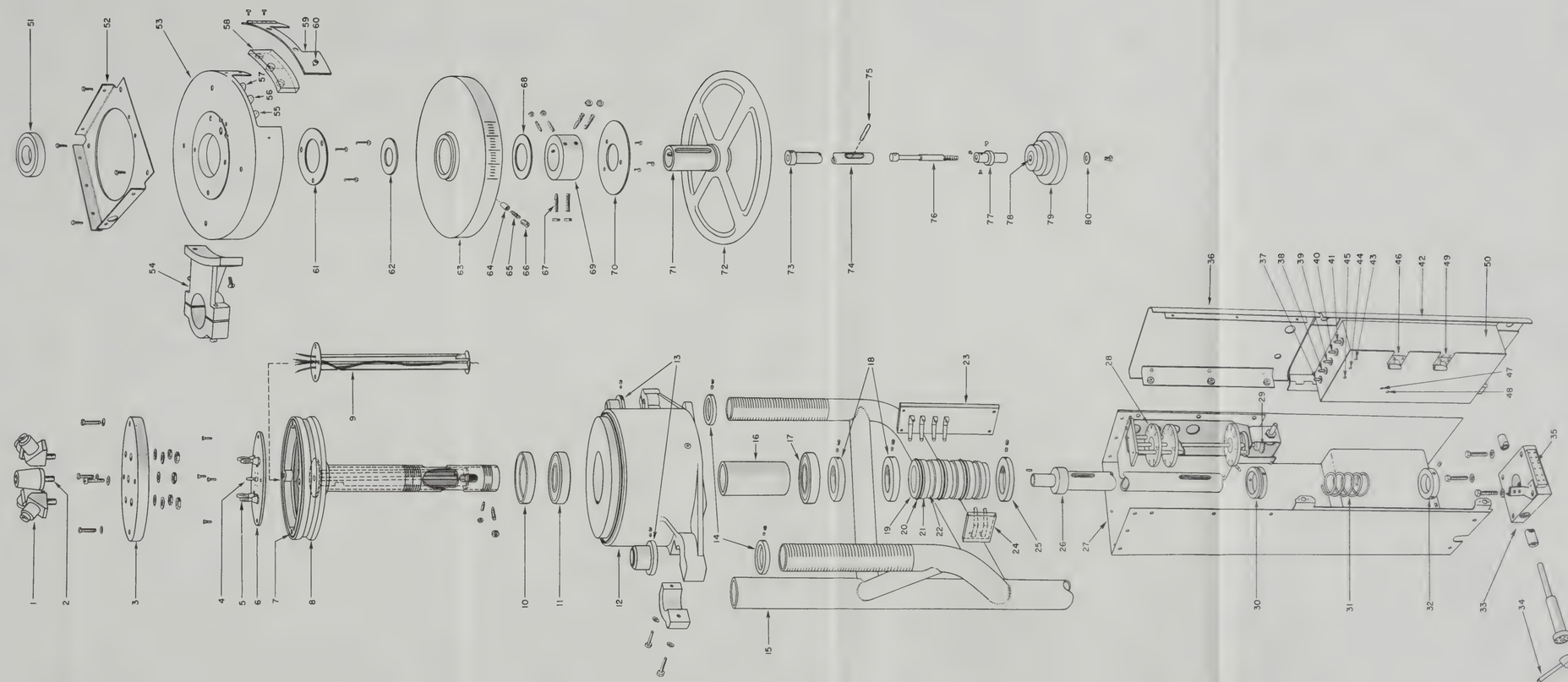

Figure 137. Radio Frequency Amplifier AM-496/TRD-4 loop controls, exploded view

TM688-11

428527 O - 57 (Face p. 264) No. 6

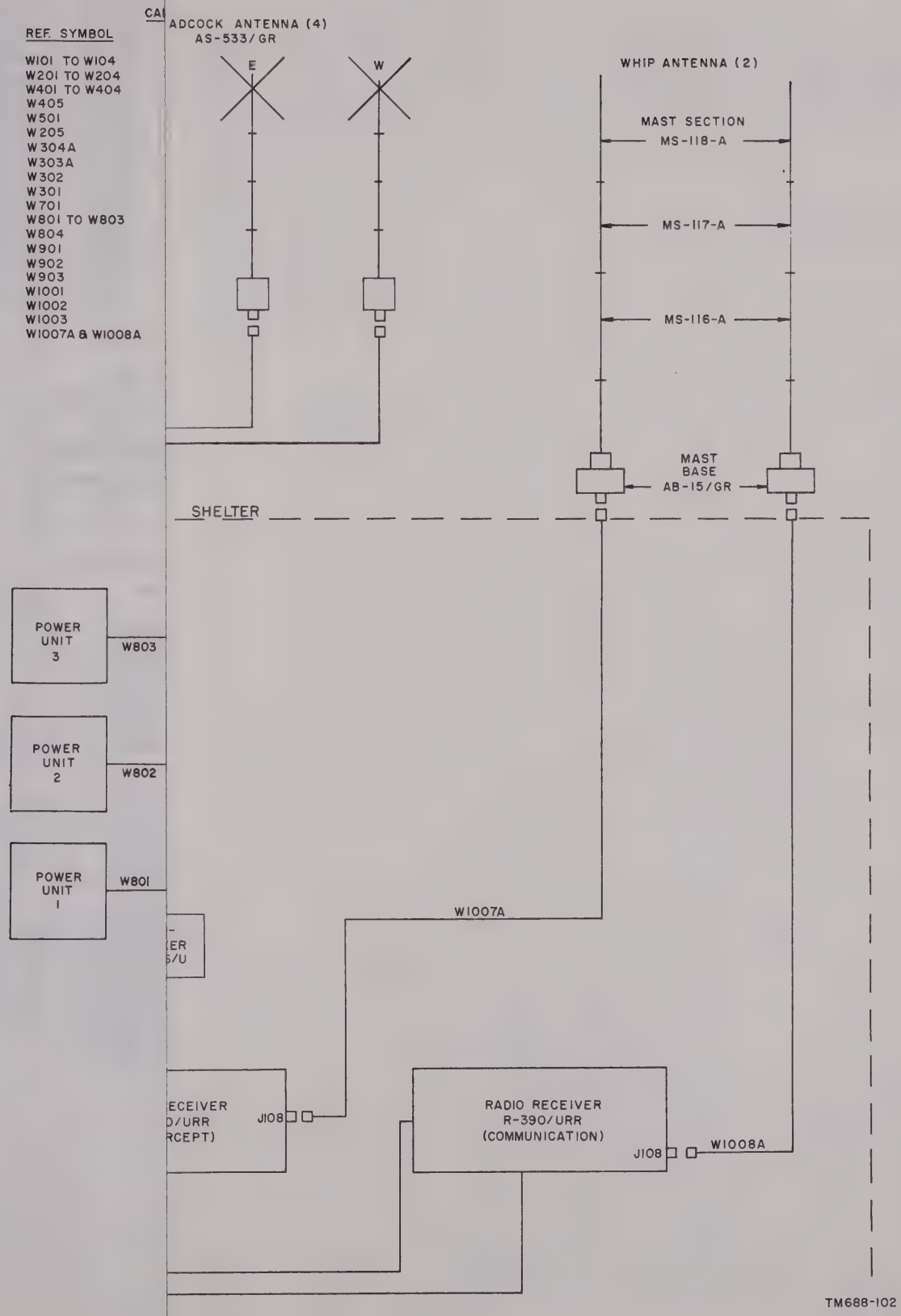

428027 O - 57 (Face p. 206) No. 7

CABLES

REF. SYMBOL	NOMENCLATURE
W101 TO W104	CG-1097/TRD-4 (170')
W201 TO W204	CG-1098/TRD-4 (9')
W401 TO W404	CG-1078/U (2' 6")
W405	CG-1079/U (2' 10")
W501	CG-1079/U (1' 10")
W205	CG-1079/U (8' 6")
W304A	CG-1079/U (3' 5")
W303A	CG-409E/U (2' 3")
W302	CX-2377/U (2' 3")
W301	CX-2378/U (3')
W701	CX-2379/U (2' 6")
W801 TO W803	CX-2380/U (20')
W804	CX-2380/U (125')
W901	CX-2381/U (8')
W902	CX-2381/U (10')
W903	CX-2382/U (10')
W1001	CX-2383/U (16')
W1002	CX-2383/U (3' 4")
W1003	CX-2384/U (9')
W1007A & W1008A	CG-1379/U (14' 6")

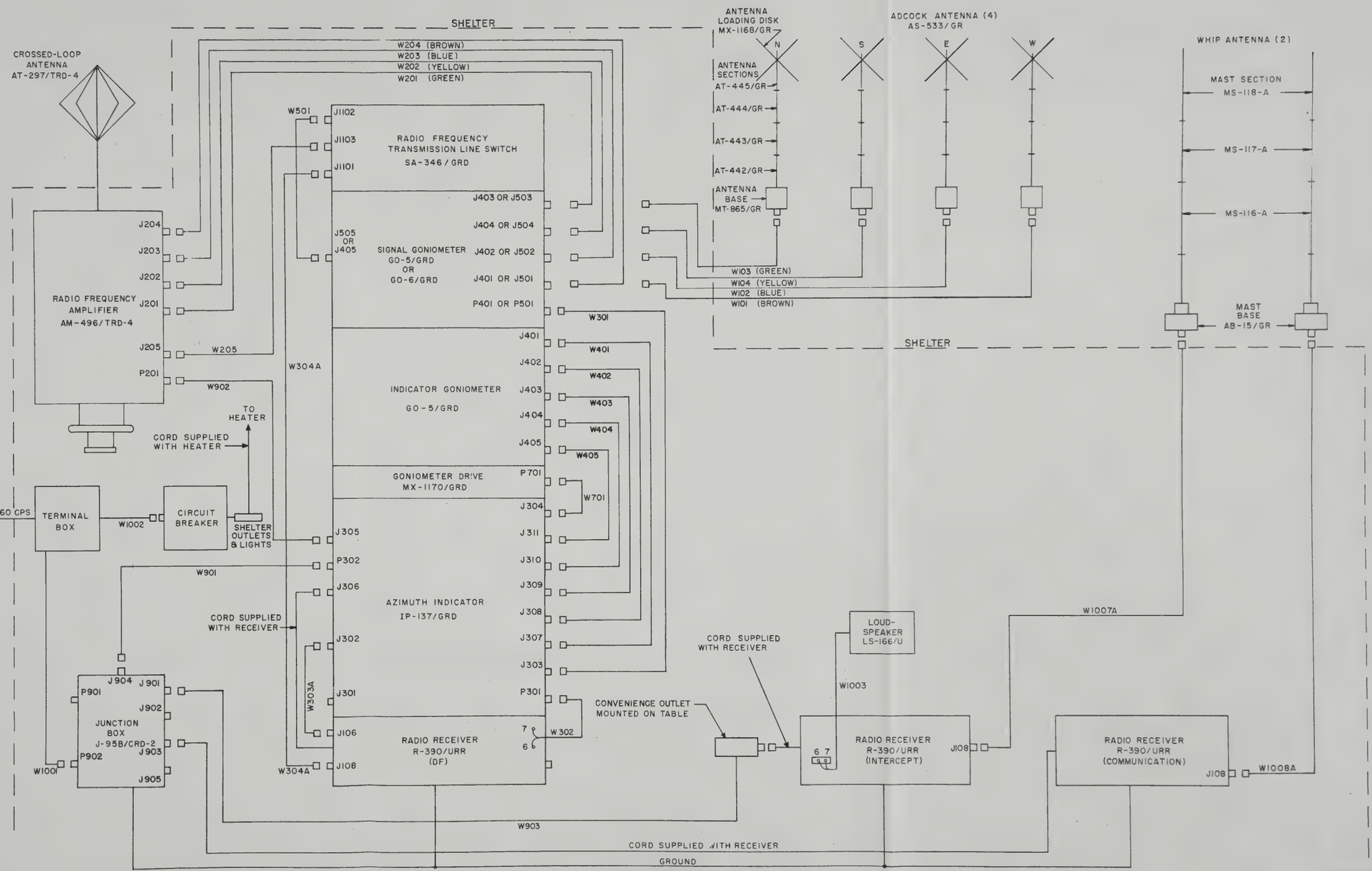

Figure 138. Direction Finder Set AN/TRD-4A, block diagram.

TM688-102

428027 O - 57 (Face p. 206) No. 7

Key to Figure 136

Item	Zone
C601 Capacitor	C2
C602 Capacitor	D2
C603 Capacitor	C2
C604 Capacitor	C4
C605 Capacitor	C4
C606 Capacitor	D3
C607 Capacitor	B4
C608 Capacitor	B4
C609 Capacitor	C4
C610 Capacitor	B4
C611 Capacitor	B4
C612 Capacitor	A2
C613 Capacitor	B4
C614 Capacitor	D4
C615 Capacitor	C4
C616 Capacitor	C4
C617 Capacitor	B1
E601 Lamp, neon	A1

Item	Zone
E602 Terminal board	D4
E603 Whip antenna	A4
L601 Coil	C1
L602 Coil	C1
L603 Coil	C1
L604 Coil	C2
L605 Coil	C2
L606 Coil	C2
L607 Coil	B1
L608 Coil	B1
L609 Coil	B1
L610 Coil	B2
L611 Coil	B2
L612 Coil	B2
L613 Choke	C4
P601 Connector	D4
P602 Connector	D4
R601 Resistor	C3

Item	Zone
R602 Resistor	C4
R604 Resistor	C4
R605 Resistor	B4
R606 Resistor	B4
R607 Resistor	B4
R608 Resistor	B4
R609 Resistor	A3
R610 Resistor	C4
R611 Resistor	C4
R612 Resistor	C4
R613 Resistor	D4
S601 Switch	A1
S602 Switch	A3
S603 Switch	B2, C2, D2
X601 Tube socket	C3
X602 Tube socket	B3
X603 Tube socket	D3

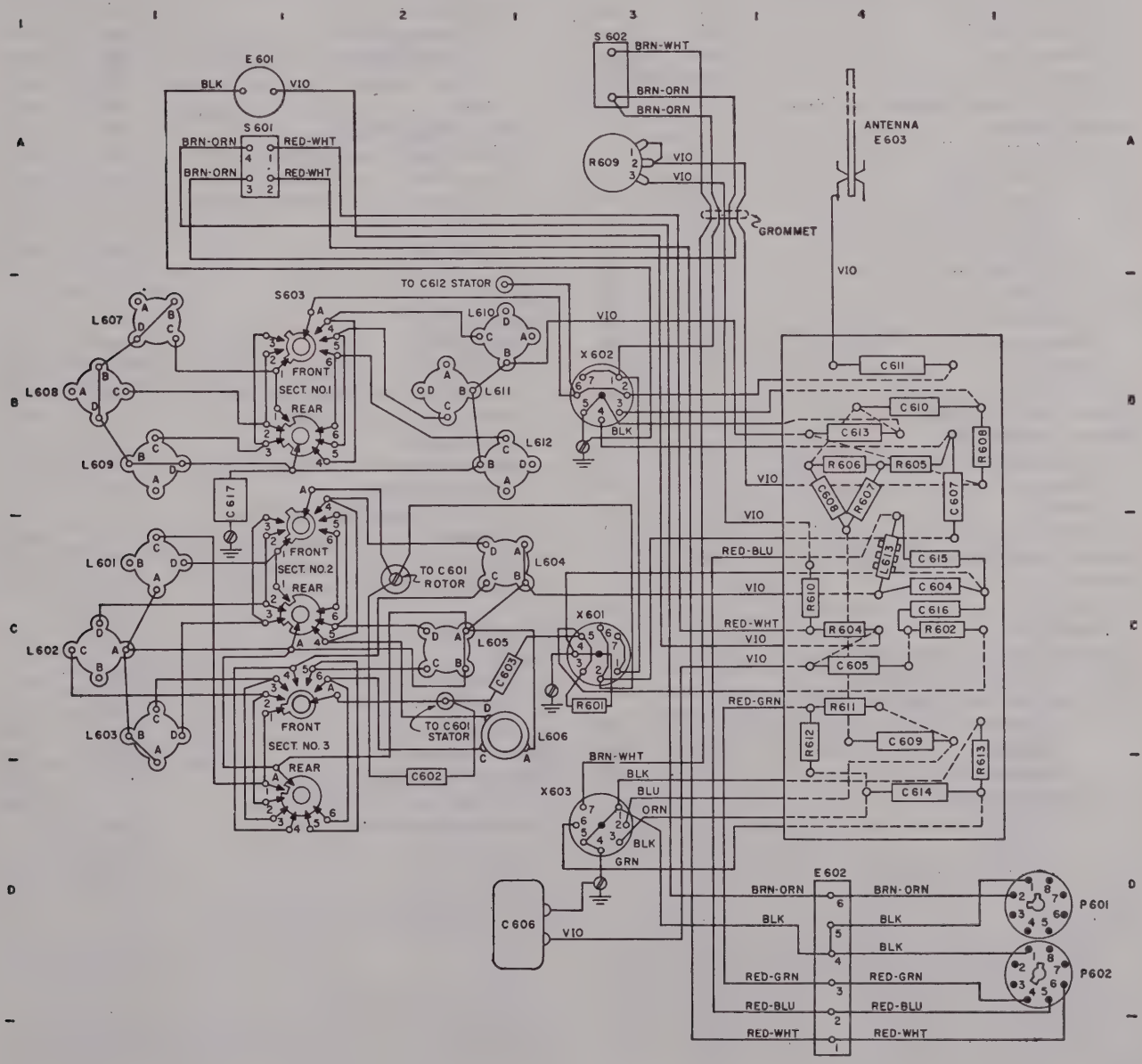

Figure 136. Radio Transmitting T-279/UR, wiring diagram.

INDEX

	Paragraph	Page
Additional equipment required	29	35
Alinement procedures:		
Azimuth indicator	216	185
Electrical Goniometers GO–5/GRD, GO–6/GRD. (*See also* Initial adjustment.)	45	52
Radio transmitter	219	189
Rf amplifier	218	188
System	222	191
Test equipment required for alining	215	185
Antenna, Adcock:		
Advantages and limitations	62	66
Antenna Section:		
AT–442/GR	11*d*	12
AT–443/GR	11*d*	12
AT–444/GR	11*d*	12
AT–445/GR	11*d*	12
Arrangements	35	38
Counterpoise	13	16
Description	11	12
Erection	39	44
Orientation	36	38
Antenna Base MT–865/GR	11*d*	12
Antenna, crossed-loop:		
Advantages and limitations	62	66
Description	12	16
Erection	40	46
Initial adjustment	46	53
Antenna Loading Disk MX–1168/GR	11*d*	12
Antenna, whip:		
Description	14	17
Installation	41	47
Antijamming operating instructions	78	78
Aural-null operation procedures:		
Adcock or crossed-loop antenna:		
Operating	73	76
Starting	72	74
Stopping	74	76
Single-loop antenna:		
Operating	76	77
Starting	75	77
Stopping	77	78
Azimuth Indicator IP–137/GRD:		
Controls	57	58
Description	21	22
Equipment performance checklist	100	88
Preliminary starting procedure	65	67
Running spares	28*a*	31
Theory	135	123
Troubleshooting chart	181	160
Azimuth indicator theory of operation:		
Block diagram	136	123
Control modulator	142	135
Deflection and indication system	144	136
Detector	141	134
Development:		
Bearing pattern	138	127
Circular pattern	137	126
Sense pattern	139	128
General	135	123
High-voltage bleeder	146	137
High-voltage power supply	148	142
If. amplifier	140	133
Power control and regulated power supply	147	140
Rf amplifier	143	136
Basic principles	5	5
Batteries:		
Description	29	35
Installation	42	49
Bearing indicator scale alinement	50	55
Bearing pattern development	138	127
Block diagrams:		
Aural-null operation crossed-loop or Adcock antenna	113	103
Aural-null operation, single-loop antenna	114	103
Direction finder	105	97
Instantaneous visual operation	112	100
Cabinet storage	27*e*	30
Cables:		
Checklist	43	50
Description	26	29
Installation	37	40
Chairs, operators	27*c*	30
Checking visual bearings	51	55
Circular pattern development	137	126
Communication receiver operation	79	79
Compass:		
Adjustment	36	38
Description	27*a*	30
Components of Direction Finder Set AN/TRD–4A:		
Minor	27	30
Table	9	7
Counterpoise MX–1169/GRD:		
Description	13	16
Installation	38	42

	Paragraph	Page
Definitions	6	5
Demolition	237	198
Df receiver:		
Equipment performance checklist	100	88
Theory	107	97
Differences in equipments	30	35
Direction finding	104	96
Drive assembly	127	117
Drive motor	126	116
Electrical Equipment Cabinet CY–1426/U	18	21
Electrical Goniometers GO–5/GRD and GO–6/GRD:		
Control	56	58
Description	20	21
Initial adjustment	45	52
Theory of operation	128–132	117
Troubleshooting chart	174	158
Equipment performance checklists:		
Goniometer drive, azimuth indicator, df receiver	101	88
Radio Transmitter T–279/UR	103	95
Rf amplifier	102	92
Errors in direction finding	110	98
Final testing:		
Azimuth indicator	225–228	192
Radio transmitter	232	196
Rf amplifier	229,230	194
Test equipment required	224	191
Forms and records	2	3
Frequency range of Direction Finder Set AN/TRD–4A	7	6
Gasoline Engine Generator Set PU–236/GT:		
Description	27*h*	30
Location	32*c*	37
Goniometer. (*See* Electrical goniometers.)		
Goniometer Drive MX–1170/GRD:		
Controls	56	58
Description	19	21
Equipment performance checklist	100	88
Initial adjustment	50	55
Running spares	28*d*	32
Theory of operation	125	116
Troubleshooting chart	173	157
Ground waves, reliability	63	67
Heater unit:		
Description	25*e*	27
Running spares	28*f*	32
Hold-down bars	25*j*	28
Indicator goniometer	130	119
Input power to Direction Finder Set AN/TRD–4A	7	6
Installation:		
Antenna arrangements	35	38
Batteries in radio transmitter	42	49
Cable check	43	50
Installation—Continued		
Counterpoise	38	42
Erection:		
Adcock antenna	39	44
Crossed-loop antenna	40	46
Whip antennas	41	47
General	34	38
Orientation of Adcock antenna	36	38
Instrumental accuracy	7	6
Intercept receiver operation	79	79
Joining cover	25*i*	28
Junction Box J–95B/CRD–2:		
Controls	55	58
Description	17	19
Troubleshooting chart	194	171
Ladder	25*g*	28
Loading skids	25*f*	27
Lubrication	93	85
Maintenance:		
Desert	94*d*	85
Painting	95	86
Rustproofing	95	86
Tropical	94*b*	85
Winter	94*c*	85
Nomenclature assignments	10	9
Octantal error	70	73
Operation under unusual conditions:		
Arctic climates	84	80
Desert climates	86	80
General	83	80
Tropical climates	85	80
Operation under usual conditions:		
Aural-null operation:		
Adcock antenna	73	76
Single-loop	76	77
General	61	66
Operating information and pattern interpretation	68	69
Operation of—		
Intercept receiver	79	79
Radio transmitter	81	79
Pattern interpretation	68	69
Types of operation	64	67
Visual operation	68	69
Packaging data	9	7
Performance checklists	100,102,103	88
Power control circuits:		
Electronic equipment	162	149
General	158	148
Heater and convenience outlets	160	149
Junction Box J–95B/CRD–2	161	149
Switch Box SA–345/U	159	148
Preventive maintenance:		
Definition	89	81
General techniques	90	81
Performance	92	82
Use of forms	91	82

	Paragraph	Page
Radio Frequency Amplifier AM–496/TRD–4:		
Controls	59	63
Description	23	24
Equipment performance checklist	102	92
Initial adjustment	47	53
Running spares	28c	32
Theory of operation	149	143
Troubleshooting chart	189	170
Radio frequency amplifier, theory of operation:		
Antenna switching system	154	146
Band switching system	156	147
Block diagram	149	143
Phase inverter	152	145
Power supply	153	145
Sense amplifier	151	144
Sense switching system	155	147
Radio Frequency Transmission Line Switch SA–346/GRD:		
Control	53	57
Description	15	17
Theory	157	147
Radio Receiver R–390/URR:		
Common troubles	184	168
Communication receiver	79	79
Controls	58	59
Description	22	24
Equipment performance checklist	100	88
Intercept receiver	79	79
Running spares	28e	32
Theory of operation	133,134	120
Radio Transmitter T–279/UR:		
Batteries	29	35
Controls	60	65
Description	24	24
Equipment performance checklist	103	95
Operation	80–82	79
Running spares	28b	31
Technical characteristics	7	6
Theory	163	150
Troubleshooting chart	198	174
Used to check visual bearings	51	55
Radio transmitter theory of operation:		
Af oscillator	164	152
Block diagram	163	150
Neon lamp oscillator	167	154
Rf amplifier	166	153
Rf oscillator	164	152
Repair:		
Azimuth indicator:		
Alidade friction adjustment and alinement	205	181
Correcting errors caused by static accumulations	208	183
Refinishing	213	184
Replacement of parts	206	182
Table of tube substitutions	98	86
Cables:		
Repair—Continued		
Goniometer drive:		
Refinishing	213	184
Replacement of parts	201	176
Radio transmitter:		
Refinishing	213	184
Replacement of parts	211	184
Table of tube substitutions	98	86
Replacement	212	184
Rf amplifier:		
Refinishing	213	184
Replacement of parts	210	183
Table of tube substitutions	98	86
Report of damaged or improper shipment	33	37
Running spares	28	31
Rustproofing and painting	95	86
Sense pattern development	139	128
Shelter S–44A/G:		
Description	25	26
Location	32b	37
Running spares	28g	33
Shipment and limited storage:		
Disassembly	233	197
Domestic shipment	235	197
Foreign shipment	236	198
Repacking	234	197
Signal goniometer	129	118
Site selection	31	36
Sky waves, reliability	63	67
Switch Box SA–345/U:		
Control	54	57
Description	16	18
System application	4	4
Table of components	9	7
Table, operating	27	30
Technical characteristics of Direction Finder Set AN/TRD–4A	7	6
Testing. (*See* Final testing.)		
Theory of operation for Direction Finder Set AN/TRD–4A	104	96
Tools and materials supplied with Direction Finder Set AN/TRD–4A	88	81
Tripod	27b	30
Troubleshooting:		
Azimuth indicator:		
Chart	181	160
Data	177	159
Operational test	180	159
Precautions	179	159
Test equipment	178	159
Goniometer drive and goniometers:		
Charts	173,174	157
Data	170	157
Operational tests	172	157
Test equipment	171	157
Junction box:		
Chart	194	171
Data	191	171
Precautions	193	171
Test equipment	196	173

	Paragraph	Page
Troubleshooting—Continued		
Procedures	168	156
Radio receiver:		
General	183	168
Troubles common to radio receiver	184	168
Radio transmitter:		
Chart	198	174
Data	195	173
Operational tests	197	174
Test equipment	196	173
Rf amplifier:		
Chart	189	170
Data	185	169
Operational tests	188	170
Precautions	187	169
Scope	96	86
Sectionalization to a component	99	87
Test equipment	186	169
Test equipment required	169	156
Troubleshooting—Continued		
Using equipment performance Checklist	100	88
Visual inspection	97	86
Uncrating, unpacking and checking equipment	33	37
Unsatisfactory equipment report, Army	2*b*	3
Used or reconditioned equipment	33*c*	38
Ventilating system	25*c*	26
Visual operation:		
Pattern interpretation	69	73
Procedure:		
Operating	68	69
Starting	67	68
Stopping	71	74
Wave propagation	109	98
Weatherproofing	94	84

[AG 413.44 (7 June 55)]

BY ORDER OF THE SECRETARY OF THE ARMY:

M. B. RIDGWAY,
General, United States Army,
Chief of Staff.

OFFICIAL:

JOHN A. KLEIN,
Major General, United States Army,
The Adjutant General.

DISTRIBUTION:

Active Army:

CNGB (1)
Tec Svc, DA (1)
Tec Svc Bd (1)
CONARC (5)
CONARC Bd (Incl ea Test Sec) (1)
Army AA Comd (2)
OS Maj Comd (5)
OS Base Comd (5)
Log Comd (5)
MDW (1)
Armies (5)
Corps (2)
Tng Div (2)
Ft & Cp (2)
Gen & Br Svc Sch (5)
SigC Sch (25)
Gen Depots (2)
SigC Sec, Gen Depots (10)
SigC Depots (20)
POE (2)
OS Sup Agencies (2)
SigC Fld Maint Shops (3)
SigC Lab (5)
Mil Dist (1)
Units organized under following TOE's:
11-7, Sig Co Inf Div (2)
11-16A, Hq&Hq Co, Sig Bn, Corps or Abn Corps (2).
11-57, Armd Sig Co (2)
11-127, Sig Rep Co (2)
11-128A, Sig Depot Co (2)
11-500A (AA–AE), Sig Svc Org (2)
11-557A, Abn Sig Co (2)
11-587A, Sig Base Maint Co (2)
11-592A, Hq&Hq Co, Sig Base Depot (2)
11-597A, Sig Base Depot Co (2)
32-55R (2)

NG: State AG (6); units—same as Active Army except allowance is one copy to each unit.
USAR: None.
For explanation of abbreviations used, see SR 320–50–1.

☆ U. S. GOVERNMENT PRINTING OFFICE: 1957 O - 428027